SCS
NATIONAL
ENGINEERING
HANDBOOK

SECTION 8

ENGINEERING GEOLOGY

Table of Contents

Chapter 1 -- Description of Materials
Chapter 2 -- Exploration Methods and Equipment
Chapter 3 -- Samples
Chapter 4 -- Logging Test Holes
Chapter 5 -- Requirements for Geologic Investigations and Sampling
Chapter 6 -- Preliminary Site Investigation
Chapter 7 -- Detailed Site Investigation
Index

SOIL CONSERVATION SERVICE
UNITED STATES DEPARTMENT OF AGRICULTURE

SCS
NATIONAL
ENGINEERING
HANDBOOK

SECTION 8

ENGINEERING GEOLOGY

SOIL CONSERVATION SERVICE
UNITED STATES DEPARTMENT OF AGRICULTURE

PREFACE

The portion of the Handbook contained herein presents criteria, methods, and equipment for making geologic investigations of damsites and taking samples for laboratory analyses. It is for the use of geologists and engineers in the Soil Conservation Service.

Numerous individuals, both geologists and engineers, have contributed generously to the preparation of this section of the Handbook. Their contributions are herewith gratefully acknowledged.

Note: This issue is for in-Service use and material contained here is not released for publication.

Washington, D. C. 1961

Reprinted with minor revisions and corrections, May, 1978.

NATIONAL ENGINEERING HANDBOOK

SECTION 8

ENGINEERING GEOLOGY

Safety and Precautions

All safety practices and procedures currently established by safety handbooks and guides of the Soil Conservation Service must be adhered to in field operations.

Emphasis on safety measures as regards drill crews should be placed on the use of safety helmets and other protective devices such as gloves and hard-toed shoes. Personnel operating drill rigs or other persons whose duties require close proximity to machinery in operation or transit, should rid themselves of ragged or torn clothing. Machinery in operation should be equipped with guards on any moving parts insofar as practicable.

Equipment operators should not run the equipment in excess of the limits of capability and safety as established and designated by the manufacturer.

Equipment should not be presumed to be in safe operating condition unless it has been adequately checked by a competent, responsible person.

Regular condition checks should be made on all equipment and the results reported.

Caution must be used when operating equipment in the vicinity of power transmission lines. Consideration should be given to the possible presence of underground utility lines.

Wire ropes or cables used with truck winches frequently are broken. Drilling party personnel should stay well clear of the reach of the cable during operations of the winch.

Crews using geophysical instruments or making other investigations involving explosive charges should be well acquainted with the precautions necessary to avoid accidents. Only properly licensed blasters may handle, load and fire explosive charges. Until such time as this method of exploration is approved for full SCS use, and SCS regulations issued, it is recommended that locally employed, licensed blasters be used.

Where trench or pit excavations require side supports of cribbing, determine that the material for the cribbing is of adequate strength and is so installed that slumping, caving and sliding cannot occur.

Test holes should be covered each evening and plugged level with the surface upon completion of exploration, to prevent accidents. An open hole is a potential danger to humans and livestock; it could cause a broken leg or even more serious accidents. Test pits and trenches should be leveled also upon completion of site investigations.

Caution should be exercised in the handling of radioactive materials and caustic, toxic, or flammable chemicals; for example, the nitrobenzene used in clay mineral tests is poisonous not only if taken internally, but also by absorption through the skin or by inhalation of the vapor.

Avoid personal accidents! Be sure to make reports on accidents within 24 hours. (See Administrative Procedures Handbook.) Get medical assistance if required, even if it is necessary to shut down operations.

All crews should have copies of the First Aid Guide and should have first aid kits as prescribed in the Guide. Snakebite kits are required in poisonous snake-infested areas.

Caution should be exercised when moving drilling equipment on roads, streets, and highways.

Bran or other grain derivatives never should be added to drilling mud since this mixture is detrimental to livestock.

Dye tracers to be used in ground water must be nontoxic to both humans and livestock. Determination of this factor must be made prior to use.

NATIONAL ENGINEERING HANDBOOK

SECTION 8

ENGINEERING GEOLOGY

CHAPTER 1 - DESCRIPTION OF MATERIALS

INTRODUCTION

General

The adequacy of a geologic investigation of a structure site depends upon accuracy in the description and classification of materials at the site and proper interpretation in respect to engineering requirements. Materials at a particular site are to be described and classified according to their geologic and physical properties and their engineering or behavior properties. These are necessary to establish correlation and stratigraphy of the site and to develop the design of the structure and construction methods to fit the particular site condition. This chapter outlines some of the more important properties of soil and rock materials which need to be considered in describing and classifying such materials.

Two systems of describing materials are employed in the engineering phases of damsite investigations: a geologic system, and the Unified Soil Classification System. The geologist must be familiar with both systems. The geologic system is based on the geologic and physical properties of materials. The Unified Soil Classification System is based on a combination of physical and behavior properties. To some extent the two systems overlap and descriptions developed for geologic interpretations also are used for engineering interpretations.

The successful engineering geologist must have a working knowledge of engineering design and construction methods in order to adequately describe and classify materials for engineering purposes. He must understand the terminology used by engineers and be able to present his interpretation in terms readily understood by them. It must be remembered that investigations of damsites are made to obtain information specifically for engineering purposes. Therefore, the terminology used in this handbook departs somewhat from standard terms normally found in geologic texts. The following is a list of some of the more important terms and their meanings as used in this handbook to describe materials:

Rock - A compact, semi-hard to hard, semi-indurated to indurated, consolidated mass of natural materials composed of a single mineral or combination of minerals.

Soils - Unconsolidated, unindurated, or slightly indurated, loosely compacted products of disintegration and decomposition.

Grain - A rock or mineral particle.

Gradation - Relative size distribution of particles.

Well graded - No sizes lacking or no excess of any size range, poorly sorted.

Poorly graded - Skip grades or excess of certain size ranges, may be well sorted.

Silt and Clay - Particles smaller than No. 200 mesh, identified by behavior characteristics rather than specific grain sizes.

Physical and Mineralogical Characteristics of Materials

Particle Characteristics

Particle characteristics, including size, shape, mineral composition, and hardness, are important considerations in establishing the origin of materials and geologic processes involved; and for determining the stratigraphy of the site. Lithologic similarity is one of the bases for establishing correlation and continuity of strata and equivalency in age. Particle characteristics also are important considerations in establishing the engineering properties and behavior characteristics of materials. The following briefly outlines some of the properties of particles and methods of classification for damsite investigations:

Size - The important classifications of size are: boulders, cobbles, gravel, sand, silt, and clay. Numerous grade scales have been developed to establish the limits of size for each of these classifications. The grade sizes used in the Unified Soil Classification System are to be used in the engineering geology phases of SCS work. Table 1-1 shows some of the commonly used grade scales for comparison.

Shape - Geologists express the degree of roundness of particles on the basis of the average radius of the corners divided by the radius of the maximum inscribed circle. Although particle shapes can be expressed numerically by this method, such a degree of accuracy is not required for geologic investigation of damsites. Visual estimation is sufficient for classification of equidimensional particles. Figure 1-1 shows a comparison of degrees of roundness and angularity which will serve as a guide to visual estimation and classification of roundness.

NATIONAL ENGINEERING HANDBOOK

SECTION 8

ENGINEERING GEOLOGY

Introduction

Purpose and Scope

The purpose of this part of the National Engineering Handbook is to present, in brief and usable form, information on equipment, tools, exploration and sampling techniques, and criteria for conducting adequate investigations of damsites. The material is compiled to assist technicians in planning site investigations, carrying out field investigations, and preparing reports within the framework of established SCS standards. The guide also will serve as a useful tool for training purposes and to promote extablishment of uniform standards and procedures for geologic investigations of damsites.

The choice of design and construction methods for a particular dam is contingent upon the characteristics of materials of which, and upon which, the structure is to be built. Knowledge of these materials, sufficient in scope and quality to satisfy design and construction requirements, is necessary for each site if consistent development of economically sound and practical structures is to be achieved. Such knowledge is acquired by thorough geologic examination of sites, by accurate foundation and borrow exploration, by soil mechanics laboratory tests, and thorough practical experience in a particular area.

This handbook is not intended to be a complete technical treatise on the subject of site investigations. Nor is it intended to establish a stereotyped pattern for site investigations. Each structure site has its own particular characteristics. The geologist and engineer must establish a pattern of investigations and application of exploration and sampling methods dependent on the site conditions, to obtain the information needed for design and construction. This requires sound judgment and a knowledge of requirements for design and construction as well as a knowledge of exploration and sampling techniques. The geologist must become thoroughly familiar with basic principles and techniques in the fields of engineering geology, soil mechanics, design, and construction, to achieve technical competence. He must work closely with the project, design, and construction engineers on each site in order to determine the requirements for that particular site and to establish investigational procedures.

Use of Earth Materials

The use of earth materials is stressed because they have three aspects of major importance: (1) The materials are usually present in abundance in the immediate area of the structure; (2) the materials have properties which permit their use for structural purposes; and (3) their availability allows a greater economy than manmade, imported materials.

Embankments

The use of natural materials in embankments is related to their inherent capacity to be remolded with, in some types, an accompanying modification in their engineering properties. Earth embankments may be homogeneous or zoned with the materials selected and remolded to form an essentially water-impervious barrier as well as a structurally strong unit.

Foundations

Materials composing foundations must support, without danger of failure, rupture, or displacement, the loads to be superimposed. The types of foundations range from bedrock to unconsolidated sediments and, as the types vary, so must the method and intensity of investigation vary.

Spillways

The spillway controls the rate of discharge through the structure. By virtue of its stability and resistance to erosion, the spillway insures the life of the entire structure. Earth spillways are susceptible to erosion. When they are to be constructed of, or in, erodible materials, great care should be given to the identification and classification of the materials.

Other Uses

Coarse-grained materials may be used for foundation and embankment drains and for erosion protection.

Riprap may be placed on the embankment so as to afford protection from the impact of water and weather.

NATIONAL ENGINEERING HANDBOOK
SECTION 8
ENGINEERING GEOLOGY

CHAPTER 1 - DESCRIPTION OF MATERIALS

CONTENTS

Page

Introduction....1-1
General....1-1
Rock....1-1
Soils....1-2
Grain....1-2
Gradation....1-2
Silt and Clay....1-2

Physical and Mineralogical Characteristics of Materials....1-2
Particle Characteristics....1-2
Size....1-2
Shape....1-2
Mineral Composition....1-5
Clay Minerals....1-5
Hardness....1-6
Mass Characteristics....1-8
Soil Materials....1-8
Consistency....1-8
Density....1-9
Moisture Content....1-9
Permeability....1-9
Coefficient of Permeability....1-9
Consolidation....1-11
Shearing Strength....1-11
Gradation....1-11
Rock Structure....1-11
Strength of Rock....1-11
Rock Characteristics Related to Engineering Properties...1-14
Color....1-15
Geologic Properties of Materials....1-15
Stratigraphy....1-15
Type of Deposit....1-16
Age....1-16
Depth, Thickness, and Continuity....1-16
Structure....1-17
Attitude....1-17
Folds....1-17
Faults....1-18
Joints....1-18
Paleontology....1-18

Page

Field Tests.....1-19
Acid Test.....1-19
Trailing Fines.....1-19
Shine Test.....1-19
Taste Test.....1-19
Ribbon Test.....1-19
Odor.....1-19
Acetone Test.....1-19

Crystal-Violet Test.....1-20
Malachite-Green Test.....1-20

Unified Soil Classification System.....1-20
Soil Components.....1-21
Gradation.....1-23
Well Graded.....1-23
Poorly Graded.....1-23
Consistency.....1-23
Field Classification Procedures.....1-25

FIGURES

Figure

1-1 Shapes of particles.....1-4
1-2 Structure of clay mineral particles.....1-7
1-3 Standard SCS geological symbols.....1-12
1-4 Grain size distribution graph.....1-24
1-5 Field Tests.....1-29

Table

1-1 Comparison of Grade Scales.....1-3
1-2 Conversion Factors for Permeability Units.....1-10
1-3 Letter Symbol.....1-21
1-4 Soil Components and Significant Properties.....1-22
1-5 Unified Soil Classification, Laboratory Criteria.....1-26
1-6 Unified Soil Classification, Field Identification.....1-27
1-7 Unified Soil Classification, Field Identification Procedures.....1-28
1-8 Engineering Properties of Unified Soil Classes.....1-32
1-9 Engineering Properties of Unified Soil Classes for Embankments.....1-33
1-10 Engineering Properties of Unified Soil Classes for Foundations and Channels.....1-34

Table 1-1. Comparison of Grade Scales

in.	UNIFIED	AASHO	AGU	WENTWORTH	mm.
	boulders	coarse gravel or stone		boulder gravel	4026
			very large boulders		2048
			large boulders		1024
			medium boulders		512
12			small boulders		256
6	large cobbles		large cobbles	cobble gravel	128
3	small cobbles		small cobbles		64
	coarse gravel		very coarse gravel	pebble gravel	32
1 3/4		medium gravel or stone	coarse gravel		16
3/8	fine gravel		medium gravel		8
mm. 4.76	No. 4*	fine gravel or stone	fine gravel		4
	coarse sand		very fine gravel	granule gravel	
2.00	No.10*				2
1.00	medium sand	coarse sand	very coarse sand	very coarse sand	1
			coarse sand	coarse sand	1/2
0.42	No.40*				
0.25			medium sand	medium sand	1/4
	fine sand	fine sand	fine sand	fine sand	
0.125					1/8
0.074	No.200*		very fine sand	very fine sand	1/16
	silt or clay	silt	coarse silt	silt	1/32
			medium silt		1/64
			fine silt		1/128
		.005 mm.	very fine silt		1/256
		clay	coarse clay size	clay	1/512
			medium clay size		1/1024
		colloids	fine clay size		1/2048
			very fine clay size		

*U.S. Standard Sieve Number

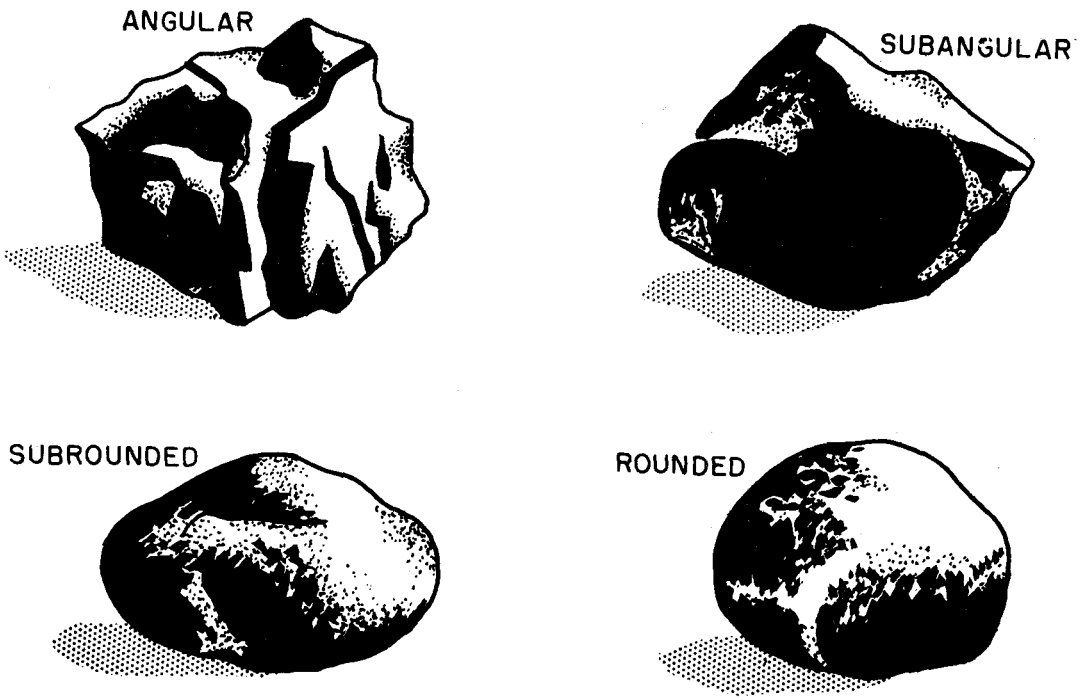

Figure 1-1 Particle Shapes

The above classification is adopted primarily to equidimensional particles of materials coarser than silt particles.

Normally it is not adequate for expression of non-equidimensional constituents either in coarse or fine-grained fractions of materials. Where flaky minerals are present these should be described on the basis of the mineral name instead of the shape, viz., biotite, muscovite, chlorite, etc. Where platy or prismatic rock fragments are present the rock type or structure controlling the shape such as bedding, cleavage, schistosity, etc., should be given as well as degree of rounding.

This classification is adopted primarily for equidimensional particles coarser than silt sizes. Normally, it is not adequate for expression of nonequidimensional constituents either in coarse or fine-grained fractions of materials. Where non-equidimensional minerals are present they should be described in such terms as platy, tabular, or prismatic. Where platy or prismatic rock fragments are present, the rock type or structure controlling the shape; such as bedding, cleavage, or schistosity; should be given as well as degree of roundness.

Mineral composition - The mineral composition of site materials varies greatly from place to place, depending upon the genesis of the materials and the geologic processes involved. The mineral composition may vary also with particle size at a particular site. The proportion of platy minerals usually increases over equidimensional minerals as the particle size decreases.

The coarse-grained materials are normally dominated by those rock-forming minerals, which are more resistant to chemical weathering, such as quartz and the heavy minerals. Rock fragments and unaltered rock-forming minerals, such as feldspar, calcite, and mica also may be present. The less complex minerals in the coarse-grained fractions can be identified readily by megascopic methods. Wherever this is possible, the predominant rock or mineral constituents and those rocks and minerals having a deleterious effect on engineering properties should be noted, using standard geologic terms.

The fine-grained materials represent the products of chemical and mechanical weathering. The mineral composition, together with weathering processes, controls the ultimate size and shape of the fine-grained particles. Quartz, feldspar, and many other minerals may, under mechanical weathering, be reduced to fine-grained equidimensional particles, such as in rock flour. Some types of minerals are broken down mechanically into platy particles. Micas are of this type. Alteration products of other types of minerals may result in the formation of platy particles.

Clay minerals - A group of minerals, known as clay minerals, requires special attention because of the influence of individual minerals on the engineering properties of soils. This is brought about by their inherently fine-grained nature, platy shape, and molecular structure. Clay minerals are predominantly hydrous aluminum silicates or more rarely, hydrous magnesium or iron silicates. Clay minerals are composed of layers of two types: (1) silicon and oxygen (silica layer) and (2) aluminum and oxygen or aluminum and hydroxyl ions (alumina or aluminum hydroxide layer).

There are three principal groups of clay minerals: kaolinites, montmorillonites, and illites. Because of variable influence of each type on the engineering property of soils, it is important

that the predominant clay mineral be properly identified whenever possible.

The kaolinite clays consist of two layer molecular sheets, one of silica and one of alumina. The sheets are firmly bonded together with no variation in distance between them. Consequently the sheets do not take up water. The kaolinite particle sizes are larger than those of either montmorillonite or illite and are more stable.

The montmorillonite clays consist of three layer molecular sheets consisting of two layers of silica to one of alumina. The molecular sheets are weakly bonded, permitting water and associated chemicals to enter between the sheets. As a result, they are subject to considerable expansion upon saturation and shrinkage upon drying. Particles of montmorillonite clay are extremely fine, appearing as fog under the high magnification of the electron microscope. Montmorillonite clays are very sticky and plastic when wet, and are of considerable concern in respect to problems of shear and consolidation.

Illite has the same molecular structure as montmorillonite but has better molecular bonding, resulting in less expansion and shrinkage properties. Illite particles are larger than montmorillonite and adhere to each other in aggregates.

Hardness - The hardness of individual minerals is normally expressed by geologists by means of the Mohs scale. Hardness, along with color, luster, transparency, streak, crystal form, cleavage or fracture, and specific gravity is an important property for identification of minerals. Hardness of individual particles is an important engineering consideration in respect to resistance to crushing when loaded.

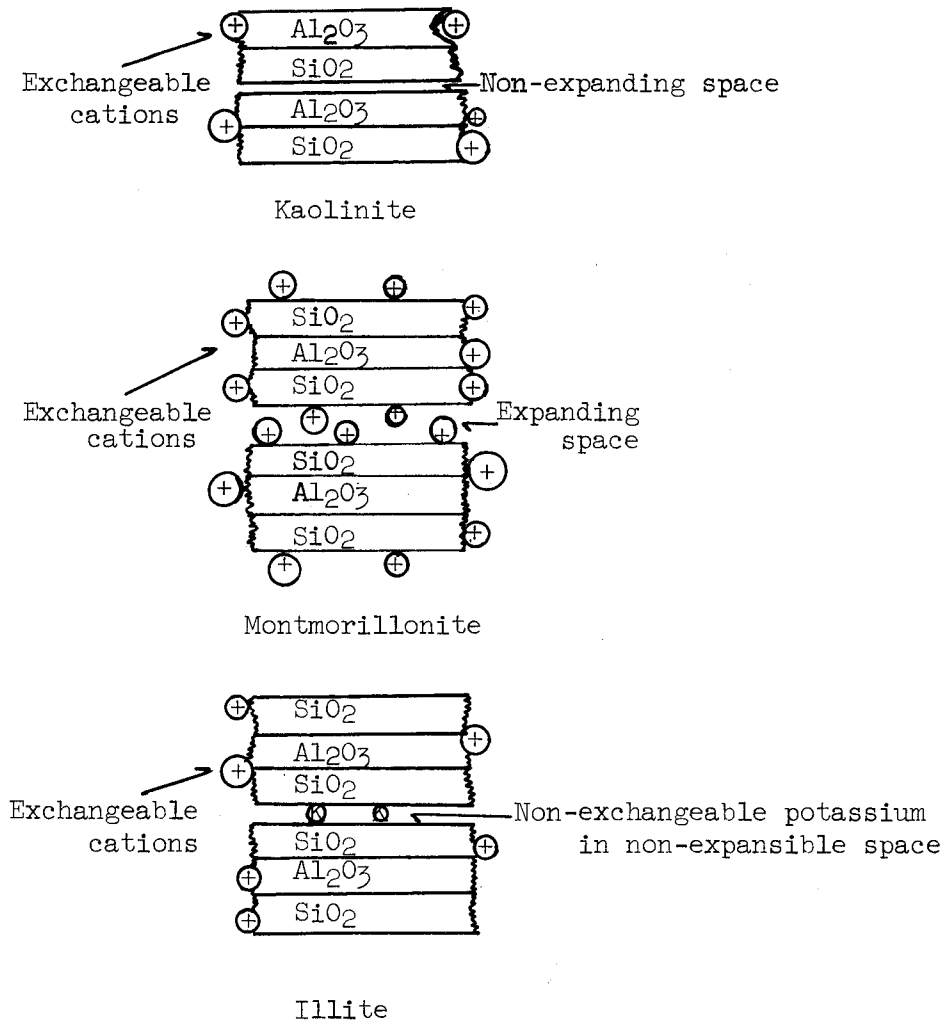

Figure 1-2. Representation of the Structure of Clay Mineral Particles

(From J. G. Cady, "Characteristics and Behavior of Soil Clay, SCS, 1954)

Mass Characteristics

Although individual particle characteristics are important for identification purposes and have an influence on engineering properties, associations of different particles impart mass characteristics and properties to both rock and soil materials, which are entirely different from those of the individual particles. This section briefly outlines mass characteristics which need to be described to develop adequate interpretations for geologic engineering purposes.

Soil materials - The term "soil materials" is here defined as the unconsolidated products of erosion and decomposition of rocks. It may include organic material. "Soil material" or "soil" consists of a heterogeneous accumulation of mineral grains, including most every type of uncemented or partially cemented inorganic and organic material to be found on the earth's surface. Soil materials may be referred to as cohesive or noncohesive, depending upon the tendency of the particles to adhere to one another.

Consistency - With increasing water content a solid clay mass changes consistency and passes from a solid state through a semisolid and plastic to a liquid state. The moisture contents, expressed in percent of dry weight, at which the mass passes from one of these stages of consistency to another are known as the Atterberg limits or limits of consistency.

The term consistency also is used to describe the relative ease with which a saturated cohesive soil can be deformed. In this sense, the consistency is described as very soft, soft, medium, stiff, very stiff, and hard.

The Atterberg limits or limits of consistency are determined on soil materials passing the 40-mesh sieve. The shrinkage limit or the limit between the solid and semisolid states is the maximum water content at which a reduction in water content will not cause a decrease in volume of the soil mass.

The plastic limit is the water content corresponding to an arbitrary limit, fixed by a standard testing procedure, between the semisolid and plastic states of consistency.

The liquid limit is the water content corresponding to the arbitrary limit, fixed by a standard testing procedure, between the plastic and liquid states of consistency.

The plasticity index is a measure of the plastic state or the range of consistency within which a soil exhibits plastic properties and is numerically equal to the difference between the liquid limit and the plastic limit.

Density - The density or unit weight of a soil is defined as the weight per unit volume. The dry density is the weight of the unit mass excluding the weight of the contained water. The wet density includes the weight of the contained water.

Moisture content - The moisture content is the ratio of the weight of water contained in the soil to the dry weight of the soil solids. This value is expressed as a percent.

Density, or unit weight, and moisture values are highly significant in embankment construction. A certain density may be specified to which the soil is to be compacted, and the moisture content at the time of compaction is very important for many soils.

Permeability - The permeability of a soil is its capacity to transmit fluids under pressure. It may vary in different directions. The water flows through the voids between the soil grains. Therefore, the larger the size of the pores and their interconnections, the greater the flow of water. It may be seen that coarse-grained soils are more permeable than fine-grained soils. A well-graded soil, having a good distribution of particle size from large to very fine, is relatively less permeable than a poorly-graded soil of a comparable size because the finer grains fill the space between the larger particles.

Coefficient of permeability - The coefficient of permeability of a given soil is the volume of flow of water through a unit area, in unit time, under unit hydraulic gradient and at a standard temperature. Area is measured at right angles to the direction of flow. There are many permeability units in use. The more common ones are:

Meinzers Units = gallons/ft^2/day under unit hydraulic gradient.

Feet/day = ft^3/ft^2/day under unit hydraulic gradient.

Cm/second = cm^3/cm^2/sec. under unit hydraulic gradient.

Feet/year = ft^3/ft^2/year under unit hydraulic gradient.

Inches/hour = $inch^3/inch^2$/hour under unit hydraulic gradient.

All units are for a standard water temperature. For precise measurements, correction to this temperature must be made. Unit head or unit hydraulic gradient is a gradient of 1:1 or 100 percent.

These units are readily interchangeable by multiplying by the proper factor as indicated in table 1-2.

Table 1-2. Conversion factors for permeability units

From \ To	Meinzers Units	Feet/day	Cm/sec.	Feet/year	Inches/hour
Meinzers Units	1.0000	0.13368	4.7159×10^{-5}	48.8256	0.06684
Feet/day	7.4806	1.0000	3.5278×10^{-4}	365.2422	0.50000
Cm/sec.	2.12049×10^{4}	2.83464×10^{3}	1.0000	1.03530×10^{6}	1.41731×10^{3}
Feet/year	0.02048	2.7379×10^{-3}	9.6590×10^{-7}	1.0000	1.3689×10^{-3}
Inches/hour	14.9611	2.0000	7.0556×10^{-4}	730.4844	1.0000

Consolidation - Consolidation refers to the volume change of a soil under load. Normally fine-grained soils consolidate more than coarse-grained soils and poorly-graded soils consolidate more than well-graded soils. Density, plasticity, porosity, permeability, and organic content are important factors in determining the degree of compressibility.

Shearing strength - Shearing strength is the resistance of soil particles to sliding upon one another.

Gradation - The term gradation is used here to describe the grain size distribution of unconsolidated or soil materials in keeping with engineering terminology. For engineering purposes the fine fraction (200 mesh) is classified as silt or clay on the basis of plasticity rather than on grain-size diameter.

This system is not entirely adequate to define all of the physical characteristics needed for identification and correlation purposes. The system to be used for geologic purposes consists of classification based primarily on the relative proportions of gravel, sand, silt, and clay. These classifications are outlined in figure 1-3.

Texture - Texture is defined as the geometrical aspects of the component particles of a rock, including size, shape, and spatial arrangement. Texture is important for field identification purposes and for predicting behavior of rock under load. Although specific geologic terms such as "phaneritic" and "aphanitic" imply specific descriptions of igneous rock, simpler terms such as "coarse-grained" and "fine-grained" should be employed to be more understandable. It is often more important to describe the presence of mineral constituents, degree of cementation, conditions of weathering, fracture system, and other properties having an influence on engineering properties, than to identify the type of rock. The symbols contained in figure 1-3, "Standard SCS Geologic Symbols" constitute a coverage normally adequate for classifying and describing rocks.

Rock structure - The structure of rocks can usually be given in a few simple terms describing holes, cavities, joints, bedding planes, fractures, cleavage, schistosity and similar features. Use of terms such as "vesicular" or "vugs" should be avoided where possible and always defined when used. Rock structure is an important consideration in respect to the amount and direction of water movement.

Strength of rock - The strength of rock is influenced by the mineralogical composition, shape of grains, texture, crystallinity, stratification, lamination, and other factors. Secondary processes such as cementation and weathering have a profound influence on the strength of rock. The following classifications,

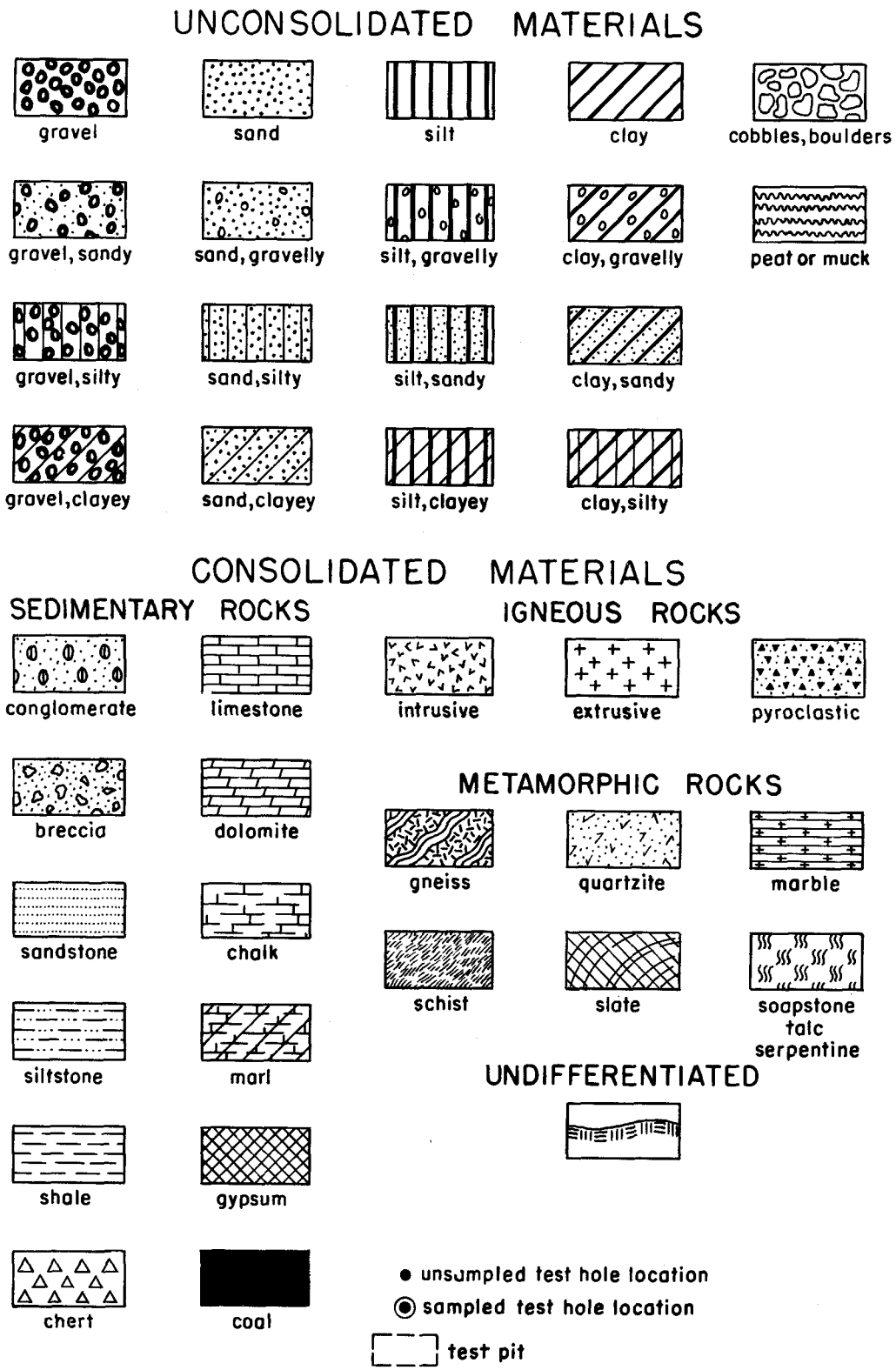

Figure 1-3. Standard SCS Geologic Symbols

based on field tests, are to be used for describing rock strength:

Very Soft - Permits denting by moderate pressure of the fingers.

Soft - Resists denting by the fingers, but can be abraded and pierced to a shallow depth by a pencil point.

Moderately Soft - Resists a pencil point, but can be scratched and cut with a knife blade.

Moderately Hard - Resistant to abrasion or cutting by a knife blade but can be easily dented or broken by light blows of a hammer.

Hard - Can be deformed or broken by repeated moderate hammer blows.

Very Hard - Can be broken only by heavy, and in some rocks, repeated hammer blows.

Cementation of rock is an important secondary process influencing the strength of rock. The principal cementing materials are silica, calcium carbonate, iron oxide, and clays. Most durable are bonds of silica, whereas clay bonds are weakest, particularly when saturated. It is important, therefore, to note the nature of cementing material when describing rock.

Chemical weathering occurs primarily through processes of hydration, oxidation, and carbonation. Chemical weathering not only influences strength of rocks but also the characteristics of soil materials derived therefrom. As a result of chemical weathering certain rocks break down into equidimensional grains whereas others break down into platy grains such as the clay minerals. Rocks, which contain minerals of variable resistance to chemical weathering, may become highly permeable through the alteration and removal of easily weathered materials and leaving the more resistant materials. The circulation of meteoric waters through fractured limestone and similar materials may develop solution channels of such large dimensions that collapse of foundations may be of concern. The products of chemical rock weathering have entirely different engineering properties than the rock from which they are derived. It is important, therefore, that the extent and character of these products be adequately described.

The strength of rock masses is greatly influenced by the presence of bedding, cleavage, schistosity, and similar features as well as by the presence of breaks such as joints and fractures. The spacing, pattern, attitude, and other characteristics of these features must be considered in evaluating strength of a rock mass. It is important that these characteristics be adequately described in describing rock masses.

Rock characteristics related to engineering properties - The character of rock is important from the standpoint of permeability, consolidation, shearing resistance, durability, and workability. The cost of structures may be greatly influenced by expensive rock excavation and by need for treatment of foundations, abutments, and reservoir basins. It is important, therefore, that where such problems exist, they be recognized and adequately described.

Foundations, abutments, and reservoir basins which are highly fractured, which contain solution channels, or are the products of differential weathering may be highly permeable. Practically all rocks have fractures. A rock mass, having extremely low porosity, might be highly permeable due to fractures and joints. Jointing is not restricted to any particular type of rock, but certain types of rocks in a particular area may possess a tendency toward larger and more closely spaced fractures than other types. Differential weathering may be found in many types of igneous and metamorphic rocks and certain sedimentary rocks. Differential weathering of cherty limestones, for example, may result in highly permeable rock foundations. It is important that the rate of permeability and the depth and direction of water movement be determined as closely as possible in order to determine requirements for foundation treatment. Field investigation may require angular boring, pressure testing, use of dyes or other tracer compounds, or other methods to properly determine permeability of rock.

The bearing strength of rock is normally adequate to support dams designed by the SCS. However, consolidation may be a problem in certain types of rock such as weakly cemented shales and siltstones, and rocks which have been altered to clay minerals. In each instance, samples of questionable materials are to be obtained for laboratory analysis, following the same procedures used for soil materials. Caverns or mines may present a problem of bearing or stability depending on the size and location of openings.

Problems of shear may result from poorly cemented shales and siltstones or highly weathered rock of low shear strength. Particular attention must be given to materials which dip in an adverse direction and which are subject to saturation or to unloading of their toe supports by excavation. This includes strata dipping downstream in foundations or strata dipping toward the centerline (parallel to the slope of the abutment) of proposed emergency spillway excavations. Rock strata of low shear strength must be thoroughly delineated and evaluated for design and construction purposes.

Cost of rock excavation may be greatly influenced by the nature of rock and secondary alteration. "Common excavation" and "rock excavation" are separate bid items for construction

contracting. The geologist must describe rock proposed for excavation in terms translatable into workability by construction equipment so that the amounts of common and rock excavation can be determined in developing invitation for bids. For further details on classification of common and rock excavation, see SCS Standard Specifications, Construction and Construction Materials, Section 4-58, Item 4.2.

The following general descriptions of rock in terms of workability will prove helpful to geologists in describing rock proposed to be excavated and to contracting officers in interpreting descriptions for developing specific bid items. Very soft and soft rocks (See p. 1-13) can be excavated by power shovels or bulldozers in practically all cases, if the entire excavation is in the formation. Power shovels can excavate moderately soft formations and heavy power shovels can excavate moderately hard rocks. Moderately soft and moderately hard rocks have some degree of cementation and include partly cemented sandstones and marls and fairly compact shales. Most formations of hard rocks and those of very hard rocks must be removed by blasting if they have considerable bulk or thickness. Stratigraphy, attitude, and jointing are important factors in developing construction methods. Thus, thin beds of hard and very hard rocks may be removed by ripper, rock plow, or power shovel if they occur in beds of not more than 6 or 8 inches in thickness or are highly jointed. Hence, a series of soft shales interbedded with 6-inch layers of hard or very hard limestones usually can be removed with a power shovel. On the other hand, a massive bed of shale or crystalline gypsum 6 feet or more thick may require blasting, although neither would be rated higher than moderately soft.

Color - Color varies widely in materials but often provides a useful means of identification for geologic and engineering purposes. Thus, the presence of organic matter, certain minerals, and some types of weathering can often be readily detected by color. In classifying color of materials, care should be used to determine whether the coloring is due to inherent color of constituents, superficial stain or tarnish, or a weathering product. There may be a marked difference of color, depending on whether the material is dry or wet.

Geologic Properties of Materials

Stratigraphy

Stratigraphy deals with the formation, composition, thickness, sequence, and correlation of materials. Knowledge of the stratigraphy such as the continuity or discontinuity of certain beds or the distribution of critical horizons may be very important in interpreting site conditions.

Stratigraphy of the site is established from the study of particle and mass characteristics and the interpretation and extrapolation of the boring and test hole data. The determination of stratigraphy involves consideration of particle characteristics, their origin, mode of transportation (wind, water, ice, gravity) and the processes of deposition and consolidation. Guiding factors are the petrographic characteristics of the materials; e.g., mineral composition, size, shape, and spatial arrangement of the particles; and the type age, depth, thickness, sequence and continuity of the deposits.

Type of deposit - Type of deposit involves the mode, agent, and processes of formation of the deposit. It furnishes information on the continuity of strata and the uniformity of physical characteristics which may be encountered. For example, deposits of loess and glacial lake deposits (varved clays) may be remarkably consistent in thickness of strata and physical characteristics of materials. Other types, such as stream bar deposits, may pinch out in a matter of a few feet and the particle characteristics vary widely over short distances. It is important, therefore, that the type of deposit be accurately described in order to properly extrapolate continuity and physical characteristics of materials.

Standard geologic terms, simplified to the extent possible for adequate interpretations, should be used to describe the type of deposit. Such terms as granite, volcanic ash, marl, limestone, and gneiss, along with the formation name or age, are commonly used to describe rock materials. Because of the highly variable characteristics of sediments, however, a greater breakdown of terms which imply mode of origin should be employed. Such deposits should be described as fan, dune, colluvium, stream channel and other types denoting origin, in order to properly interpret physical characteristics.

Age - The age of a stratum establishes its vertical position in the geologic column and its relationship to other strata. Age should always be indicated using accepted geologic eras, periods, epochs, and ages when identifiable.

Depth, thickness, and continuity - The depth and thickness of materials at specific points at a site are determined from exposure and subsurface boring or test holes. Continuity must be interpreted on the basis of depth, thickness, type, and similarity of deposits and particle and bulk characteristics measured and described at different observation points. To facilitate interpretation of continuity, all measurements of depth should be referenced to a common elevation based either on mean sea level or an assumed datum plane. It is important that the vertical and areal continuity be determined for those materials which may have an effect on the design and construction of a dam. Continuity is best established on a graphic basis.

Depth and thickness of identified strata are to be plotted on graph paper at their proper elevations. Continuity lines are to be drawn in (dashed) where correlation of similar strata from different bore holes is possible. Forms SCS - 35A, 35B, 35C, and 35D, "Plan and Profiles for Geologic Investigation," are provided for this purpose. For examples, see chapter 4, figure 4-1. If a stratum in the vertical column of one observation cannot be correlated with any stratum in the next column, continuity has not been established. If correct interpretations have been made, the particular stratum is considered to be discontinuous. This should be shown by correlation lines which pinch out between bore holes. Discontinous strata are a common occurrence in types of materials having lenticular beds or where faults or other structural movements have resulted in shifting of beds to positions where they are not concordant. Whenever the limits of continuity cannot be established, and the discontinuity cannot be accounted for in the interpretations, additional observations are needed until sufficient exploration has been done to confirm lateral and longitudinal continuity or discontinuity.

Structure

The geologic structure of the site is of primary consideration in site selection. The term "structure" as applied to the geology of a damsite, refers to all of the geologic structural features either at the damsite or influencing the site. These features include faults, folds, unconformities, joints, fractures, rock cleavage, etc. Structure has an important influence on the geologic conditions of a site and the ultimate stability and safety of an engineering structure. Problems of leakage, sliding of embankments, uplift pressure in foundations, and differential settlement are often traced back to inadequate delineation and consideration of the geologic structure at the site.

Attitude - Attitude implies the geometric alinement of strata, faults, fractures, and other features, and is usually expressed in terms of dip and strike. In some instances, such as in plunging anticlines, for example, special conditions require more elaborate descriptions than dip and strike. In describing attitude, standard geologic terms should be used.

Folds - Folding is a common type of deformation in the earth's surface. Many folds extend over large areas so that deformation results in a more or less uniform dip and strike at a particular site. Smaller, local folds, however, are usually of more concern than those of a regional character. Minor folds which create channels with capacity for substantial subterranean water movement may escape detection in a geologic investigation of a damsite. Where such folds are suspected and anomalies of continuity in respect to apparent inclination of strata in bore holes are encountered, additional borings may be required to

determine the location and size of the folds for design considerations. Descriptions of folds should indicate their size, location, type (anticlinal, synclinal, drag) and the attitude of the limbs and axial plane.

Faults - A fault is defined as a break in the earth's crust along which movement has taken place. Displacement may be but a few inches or many miles. Faults may be detected by discontinuity of strata and by surface features. Aerial photographs often provide evidence of the presence of faults in an area. Faults may present a serious problem when they occur at a structural site. One that is active obviously presents a serious hazard. In addition, those that are now inactive may have so modified the geology that the site presents special problems in design, construction, or functioning of the proposed structure. Faults encountered at sites should be described in detail, including type, such as normal or reverse, attitude of the fault plane and the direction and amount of displacement. Juxtaposition of materials with quite different engineering properties and modification of ground water conditions are examples of the effects of faulting that may be important. Furthermore, the fault zone is of special importance if appreciable rock shattering or alteration of minerals has occurred, or if appreciable gouge has formed. In these instances, the approximate dimensions of the fault zone should be determined and changes in character of materials described.

Joints - Joints are defined as breaks in the rocks of the earth's crust along which no movement has occurred. Joints usually occur in systematic patterns. They may allow movement of ground water through otherwise impermeable material and this in turn may create problems in design, construction, or functioning of the structure. The number and orientation of joint systems and their spacing also influences the ease of rock excavation. Description of joints should include, besides their attitude, the spacing and the estimated depth of jointing, type of joints (strike, dip, or oblique,) and kind of joint system.

Paleontology

Evidences of life in the past are important for correlation purposes to establish continuity. Fossils are keys to correlation of rock strata. The presence of artifacts may be a means of distinguishing between Recent and Modern sediments. Plant and animal remains may have a very marked influence (usually adverse) on engineering properties. Thus, peat, muck, and carbonized plant remains have little value as construction materials. Tests or shells of foraminifera, algae, coral, and other components impart specific behavior characteristics to engineering materials. Descriptions of

artifacts and fossils, where they have little or no influence on the engineering properties of materials, should be limited to brief notes needed for correlation purposes. More detailed descriptions are needed where such materials have an influence on the engineering properties. These should include description of the nature of materials, including name, their extent and distribution in the formation.

Field Tests

The geologist may need to make field tests to further delineate geologic properties and to classify materials more accurately. The classification of unconsolidated materials for engineering purposes is done according to the Unified Soil Classification System, using standard tests developed for this purpose. These standard tests are described in the section on the Unified Soil Classification System. In addition to these standard tests, additional tests may be employed to aid in classifying materials and identifying special properties. Some of the tests are described below.

Acid test - Effervescence when a drop of dilute hydrochloric acid (one-tenth normal) is placed on a soil or rock indicates the presence of calcium carbonate.

Trailing fines - When a small sample of pulverized dry soil is shaken in the palm of the hand at a slight angle, the fine portion will trail behind. This is an aid in determining the relative proportion of the various grain sizes.

Shine test - When a dry or moist lump of soil is cut with a knife, a shiny surface indicates the presence of plastic clay.

Taste test - A dry lump of soil with a high clay content will adhere to the tongue.

Ribbon test - Plastic clays, when squeezed between the finger and thumb with a sliding motion, form a ribbon. The strength of the ribbon is an indication of the plasticity of the soil.

Odor - Organic soils have a pronounced and distinctive odor. Heating may intensify organic odors.

Acetone test - If gypsiferous soils are suspected, it may be necessary to conduct the following simple test:

1. Place 0.20 pound of air dry soil in a one-quart bottle and fill the bottle with distilled water.

2. Shake the soil-water mixture for about 20 minutes and then allow it to settle for 10 or more hours.

3. After this settling period, the solution above the soil will be clear if the soil contains significant amounts of gypsum. If the solution is cloudy, significant amounts of gypsum probably are not present.

4. Carefully pour about 1/2 ounce of the clear solution into a glass container without disturbing the settled soil in the bottom of the bottle.

5. Test this 1/2 ounce of solution for gypsum by adding 1/2 ounce of acetone to the solution. The presence of a milky, cloudy precipitate in the test solution indicates gypsum.

Crystal-violet test - The crystal-violet staining solution causes montmorillonite to appear green at first and then change to a greenish yellow or orange yellow. The sample must be treated with hydrochloric acid prior to applying the stain. With this test illite attains a dark green color. Kaolinite merely absorbs the violet dye. The test solution consists of 25 cc of nitrobenzene and 0.1 gram of crystal violet.

Malachite-green test - Clay minerals of the kaolinite group (when treated with hydrochloric acid) show a bright apple-green color after application of malachite green solution. The solution consists of 25 cc of nitrobenzene and 0.1 gram malachite green. Montmorillonite and illite clays usually show greenish yellow or pale yellow.

Unified Soil Classification System

The Unified Soil Classification System provides a method of grouping unconsolidated earth materials according to their engineering properties. It is based on soil behavior, which is a reflection of the physical properties of the soil and its constituents. This system has been accepted as a tentative standard by the ASTM and given designation D2487 (laboratory method) and D2488 (field methods).

For the purpose of classification, the system established 15 soil groups, each having distinctive engineering properties. Boundary classifications are provided for soils which have characteristics of two groups.

Letter symbols have been derived from terms which are descriptive of the soil components, gradation, and liquid limit. These are combined to identify each of the 15 soil groups. Table 1-3 lists these letter symbols.

Table 1-3. Letter Symbol

Component		Modifier	
Letter Symbol	Name	Letter Symbol	Name
None	Boulders or Cobbles	W	Well graded
G	Gravel	P	Poorly graded
S	Sand	M	Silty
M	Silt	C	Clayey
C	Clay	H	High liquid limit
O	Organic	L	Low liquid limit
Pt	Peat	---	---

Soil Components

The term "soil components" has been given to the solid mineral grains of which earth materials are composed. They range in size from over 12 inches average diameter to colloidal size. The particle size, gradation, shape, and mineral composition affect the behavior of the soil, as do the moisture content and the inclusion of other materials such as organic matter, gases, and coatings of cementing minerals. Table 1-4 lists various soil components with their associated grain sizes and descriptions and enumerates some of their significant properties. Comparison of grain size boundaries of the Unified System with those of other commonly used grade scales is shown in table 1-1.

Table 1-4

Soil Components and Significant Properties 1/

Soil Component	Symbol	Grain size range and description	Significant properties
Boulder	None	Rounded to angular, bulky, hard, rock particle, average diameter more than 12 in.	Boulders and cobbles are very stable components, used for fills, ballast, and to stabilize slopes (riprap). Because of size and weight, their occurrence in natural deposits tends to improve the stability of foundations. Angularity of particles increases stability.
Cobble	None	Rounded to angular, bulky, hard, rock particle, average diameter smaller than 12 in. but larger than 3 in.	
Gravel	G	Rounded to angular, bulky, hard, rock particle, passing 3-in. sieve (76.2 mm) retained on No. 4 sieve, (4.76 mm).	Gravel and sand have essentially same engineering properties differing mainly in degree. The No. 4 sieve is arbitrary division, and does not correspond to significant change in properties. They are easy to compact, little affected by moisture, not subject to frost action. Gravels are generally more pervious, stable, and resistant to erosion and piping than are sands. The well-graded sands and gravels are generally less pervious and more stable than those which are poorly graded. Irregularity of particles increases the stability slightly. Finer, uniform sand approaches the characteristics of silt; i.e., decrease in permeability and reduction in stability with increase in moisture.
Coarse		3 - 3/4 in.	
Fine		3/4 in. to No. 4 sieve (4.76 mm).	
Sand	S	Rounded to angular, bulky, hard, rock particle, passing No. 4 sieve (4.76 mm) retained on No. 200 sieve (0.074 mm).	
Coarse		No. 4 to 10 sieves: 4.76 to 2.0 mm.	
Medium		No. 10 to 40 sieves: 2.0 to 0.42 mm.	
Fine		No. 40 to 200 sieves: 0.42 to 0.074 mm.	
Silt	M	Particles smaller than No. 200 sieve (0.074 mm) identified by behavior; that is, slightly or nonplastic regardless of moisture and exhibits little or no strength when air dried.	Silt is inherently unstable, particularly when moisture is increased, with a tendency to become quick when saturated. It is relatively impervious, difficult to com highly susceptible to frost heave, easil erodible and subject to piping and boiling. Bulky grains reduce compressibility; flaky grains, i.e., mica, diatoms, increase compressibility, produce an "elastic" silt.
Clay	C	Particles smaller than No. 200 sieve (0.074 mm) identified by behavior; that is, it can be made to exhibit plastic properties within a certain range of moisture and exhibits considerable strength when air dried.	The distinguishing characteristic of clay is cohesion or cohesive strength, which increases with decrease in moisture. The permeability of clay is very low. It is difficult to compact when wet and impossible to drain by ordinary means, when compacted is resistant to erosion and piping, is subject to expansion and shrinkage with changes in moisture. The properties are influenced not only by the size and shape, (flat, plate-like particles), but also by their mineral composition; i.e., the type of clay-mineral, and chemical environment or base exchange capacity. In general, the montmorillonite clay minerals have greatest, and kaolinite the least adverse effect on the properties of soils.
Organic Matter	O	Organic matter in various sizes and stages of decomposition.	Organic matter present in even moderate amounts increases the compressibility and reduces the stability of the fine-grained components. It also may decay, causing voids, or by chemical alteration change the properties of a soil. Hence organic soils are not desirable for engineering uses.

1/ Adopted from Use of the Unified Soil Classification System by the Bureau of Reclamation, A. A. Wagner, Fourth International Conference on Soil Mechanics and Foundations, London, England, August 1957.

A 1/4-inch is approximately equivalent to the No. 4 U. S. Standard sieve. The No. 200 U. S. Standard sieve size is about the smallest particle visible to the naked eye. The No. 40 sieve size is the limit between medium and fine sand and "Atterberg limit" tests are performed on the fraction finer than the No. 40 sieve size in the laboratory.

Gradation

Well graded - Soils which have a wide range of particle sizes and a good representation of all particle sizes between the largest and the smallest present are said to be well graded.

Poorly graded - Soils in which most particles are about the same size or have a range of sizes with intermediate sizes missing (skip grades) are said to be poorly graded.

The gradation or grain-size distribution of soils consisting mainly of coarse grains is diagnostic of the physical properties of the soil. However, gradation is much less significant for predominantly fine-grained soils.

In the soil mechanics laboratory, the amounts of the various sized grains are determined by sieving and mechanical analysis and the results plotted on form SCS-353. The type of gradation is readily apparent from the shape of the grain-size curve. Figure 1-4 illustrates the grain-size distribution graphs of some typical soils. Poorly graded soils have steeply sloping curves, very flat curves, or abrupt changes in the slope of the curves, when plotted on semi-log graph paper. Well graded soils plot as smooth curves. To qualify as well-graded, the gradation must meet certain requirements in respect to coefficient of uniformity and coefficient of curvature of the plotted graph. The coefficient of uniformity (C_u), which is a measure of size range of a given sample, is the ratio of that size, of which 60 percent of the sample is finer (D_{60}); to that size, of which 10 percent of the sample is finer (D_{10}). The coefficient of the curvature (C_c), which defines the shape of the grain-size curve, is the ratio of the square of that size, of which 30 percent of the sample is finer (D_{30}), to the product of the D_{60} and D_{10} sizes. These ratios can be simply written:

$$C_u = \frac{D_{60}}{D_{10}} \qquad C_c = \frac{(D_{30})^2}{D_{60} \times D_{10}}$$

See table 1-5 for explanation of the use of these coefficients and other criteria for laboratory identification procedures.

Consistency

The most conspicuous physical property of the fine-grained soils is their consistency which relates to plasticity or lack thereof.

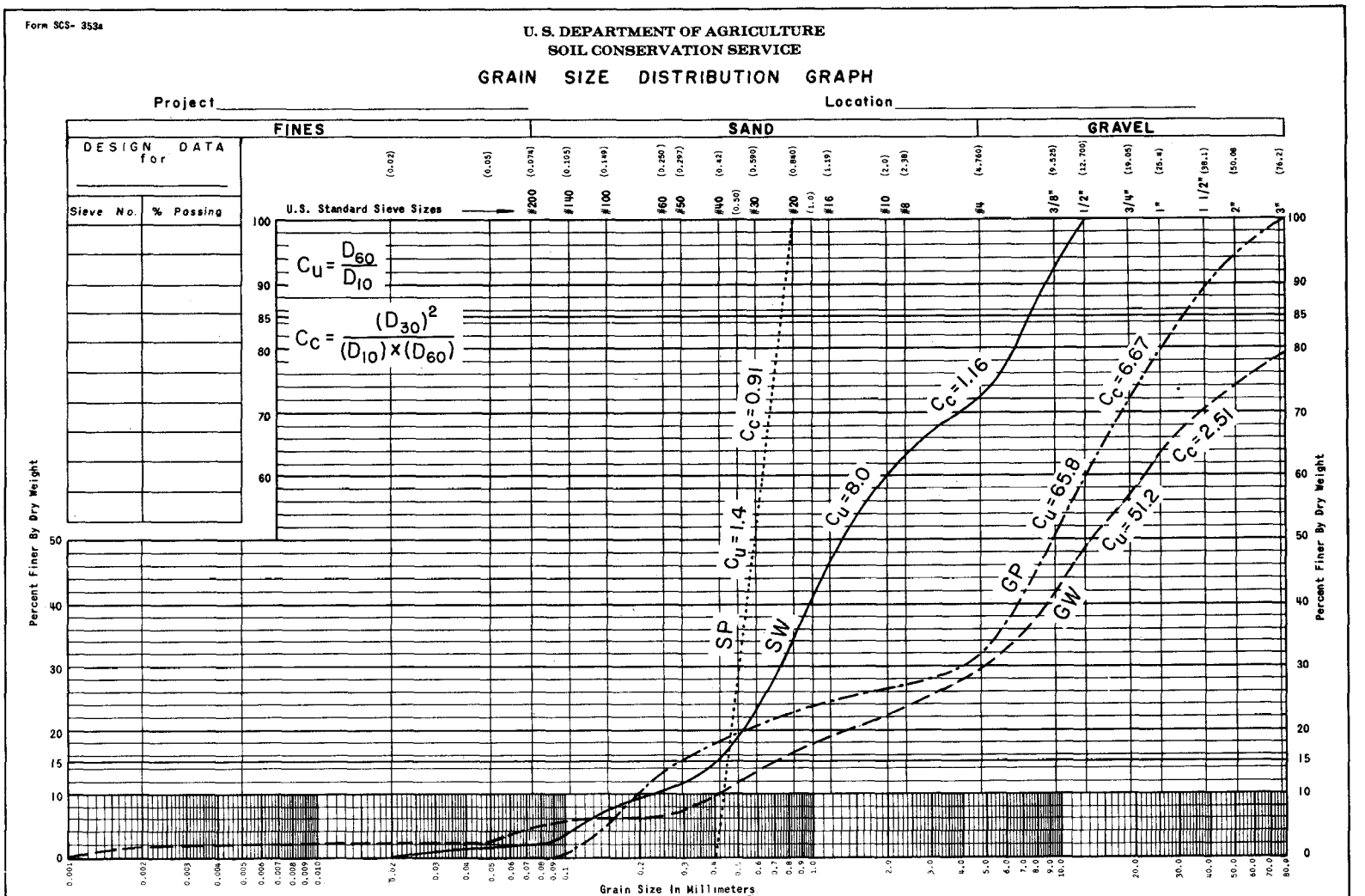

Figure 1-4- Grain Size Distribution Graph

The various stages of consistency have been described under Mass Characteristics. Atterberg tests are used to determine the liquid and plastic limits of soils in the laboratory. Field tests for dilatancy (reaction to shaking), dry strength (crushing characteristics), and toughness (consistency near the plastic limit) have been devised for field determinations. Tables 1-6 and 1-7 contain the procedures for making these field determinations and the methods of field classifications. The tests are illustrated in figure 1-5.

Field Classification Procedures

An adequate description of the soil material encountered in a geologic investigation is very important. Such characteristics as approximate percentage of the sizes, maximum size, shape, and hardness of coarse grains; mode of origin, and type of deposit; structure; cementation; dispersion; moisture and drainage conditions; organic content; color; plasticity; and degree of compaction; in addition to typical name and group symbol, should be recorded in accurate and precise but simple terms. Local or geologic names should be included also where possible.

The field procedure does not require specialized equipment. A supply of clear water in a syringe or oil can and small bottles of dilute hydrochloric acid, acetone, and other reagents will facilitate the work. The geologist who lacks experience in classifying materials in the Unified Soil Classification System will find it expedient to use No. 4, No. 40, and No. 200 U. S. Standard Sieves in the field in the initial stages of training to aid in identifying relative quantities of coarse and fine-grained samples. Identification without the aid of sieves becomes relatively easy with practice and experience.

A representative sample is required for classification. The average size of the largest particle is estimated. The boulders and cobbles are removed and the percentage by weight in the total sample is recorded. The amount of over-sized material may be of importance in the selection of sources for embankment material. The distribution of boulders and cobbles and an estimate of their percentage in foundation materials should be noted so that their effect on the physical properties of the materials and possible construction problems can be evaluated. The rest of the procedure is, in effect, a process of simple elimination.

The following step-by-step procedure should be used:

1. Spread the sample on a flat surface or in the palm of the hand to aid in observing the relative amounts of coarse and fine-grained components. Classify the soil as coarse-grained

Table 1-5.--The Unified Soil Classification, Laboratory Criteria

						UNIFIED SOIL CLASSES
COARSE-GRAINED SOILS Less than half of material passes the No. 200 sieve size.	GRAVELS Less than half of the coarse fraction passes the No. 4 sieve size.	CLEAN GRAVELS Less than 5% passing the No. 200 sieve size.	Borderline cases require the use of dual symbols.	WELL GRADED Meets gradation requirements	GRADATION REQUIREMENTS ARE: $C_u = \frac{D_{60}}{D_{10}} > 4$ and, $C_c = \frac{(D_{30})^2}{D_{10} \times D_{60}} <$ between 1 & 3	GW
				POORLY GRADED Does not meet gradation requirements		GP
		GRAVELS WITH FINES More than 12% passing the No. 200 sieve size.		Plasticity limits of material passing No. 40 sieve size plots below "A" line and P.I. less than 4.	Plasticity limits above "A" line with P.I. between 4 and 7 are border-line cases and require use of dual symbols	GM
				Plasticity limits of material passing No. 40 sieve size plots above "A" line or P.I. more than 7.		GC
	SANDS More than half of the coarse fraction passes the No. 4 sieve size.	CLEAN SANDS Less than 5% passing the No. 200 sieve size.	Borderline cases require the use of dual symbols.	WELL GRADED Meets gradation requirements	GRADATION REQUIREMENTS ARE: $C_u = \frac{D_{60}}{D_{10}} > 6$ and, $C_c = \frac{(D_{30})^2}{D_{10} \times D_{60}} <$ between 1 & 3	SW
				POORLY GRADED Does not meet gradation requirements		SP
		SANDS WITH FINES More than 12% passing the No. 200 sieve size.		Plasticity limits of material passing No. 40 sieve size plots below "A" line and P.I. less than 4.	Plasticity limits above "A" line with P.I. between 4 and 7 are border-line cases and require use of dual symbols	SM
				Plasticity limits of material passing No. 40 sieve size plots above "A" line or P.I. more than 7.		SC
FINE-GRAINED SOILS More than half of material passes the No. 200 sieve size.	SILTS AND CLAYS Liquid limit less than 50	Below "A" line and P.I. less than 4		Above "A" line with P.I. between 4 and 7 are border-line cases requiring use of dual symbols		ML
		Above "A" line or P.I. more than 7				CL
		Below "A" line and P.I. less than 4 and $\frac{\text{L.L. (oven dry soil)}}{\text{L.L. (air dry soil)}} < 0.7$		PLASTICITY CHART		OL
	SILTS AND CLAYS Liquid limit greater than 50	Below "A" line				MH
		Above "A" line				CH
		Below "A" line and $\frac{\text{L.L. (oven dry soil)}}{\text{L.L. (air dry soil)}} < 0.7$				OH
HIGHLY ORGANIC SOILS				$\frac{\text{L.L. (oven dry soil)}}{\text{L.L. (air dry soil)}} < 0.7$		Pt

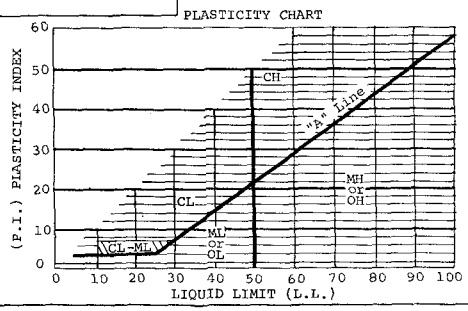

Table 1-6.--Unified Soil Classification, Field Identification

													UNIFIED SOIL CLASSES
COARSE GRAINED SOILS	More than half of material (by weight) is of individual grains visible to the naked eye.	No. 200 sieve size is about the smallest particle visible to the naked eye.	GRAVEL AND GRAVELLY SOILS	More than half of Coarse Fraction (by weight) is larger than ¼ in. size.	For visual classification the ¼ in. size may be used as equivalent to the No. 4 sieve size.	CLEAN GRAVELS Will not leave a dirt stain on a wet palm.	Wide range in grain sizes and substantial amounts of all intermediate particle sizes.						GW
							Predominantly one size or a range of sizes with some intermediate sizes missing.						GP
						DIRTY GRAVELS Will leave a dirt stain on a wet palm.	Nonplastic fines or fines with low plasticity (for identification of fines see characteristics of ML below).						GM
							Plastic fines (for identification of fines see characteristics of CL below).						GC
			SAND AND SANDY SOILS	More than half of Coarse Fraction (by weight) is smaller than ¼ in. size.		CLEAN SANDS Will not leave a dirt stain on a wet palm.	Wide range in grain size and substantial amounts of all intermediate particle sizes.						SW
							Predominantly one size or a range of sizes with some intermediate sizes missing.						SP
						DIRTY SANDS Will leave a dirt stain on a wet palm.	Nonplastic fines or fines with low plasticity (for identification of fines see characteristics of ML below).						SM
							Plastic fines (for identification of fines see characteristics of CL below).						SC
FINE GRAINED SOILS	More than half of material (by weight) is of individual grains not visible to the naked eye.	See Identification Procedures	SILTS AND CLAYS (Low Plastic)	ODOR	DRY CRUSHING STRENGTH	Slight	Rapid	DILATANCY (SHAKE) REACTION	TOUGHNESS	RIBBON (NEAR THE P.L.)	None	SHINE (NEAR THE P.L.)	Dull	ML
						High		Medium to None			Weak		Slight to Shiny	CL
				Pro-nounced		Medium		Slow to None		Low	None		Dull to Slight	OL
			SILTS AND CLAYS (Highly Plastic)			Medium		Very Slow to None		Medium	Weak		Slight	MH
						Very High		None		High	Strong		Shiny	CH
				Pro-nounced		High		None		Low to Medium	Weak		Dull to Slight	OH
HIGHLY ORGANIC SOILS							Readily identified by color, odor, spongy feel and frequently by fibrous texture.							Pt

Table 1-7.--Unified Soil Classification, Field Identification Procedures

FIELD IDENTIFICATION PROCEDURES FOR FINE-GRAINED SOILS OR FRACTIONS	INFORMATION REQUIRED DURING LOGGING		UNIFIED SOIL CLASSES
These procedures are to be performed on the minus No. 40 sieve size particles, approximately 1/64 in. For field classification purposes, screening is not intended, simply remove by hand the coarse particles that interfere with the tests. Dry Strength (Crushing characteristics) After removing particles larger than No. 40 sieve size, mold a pat of soil to the consistency of putty, adding water if necessary. Allow the pat to dry completely by oven, sun, or air drying, and then test its strength by breaking and crumbling between the fingers. This strength is a measure of the character and quantity of the colloidal fraction contained in the soil. The dry strength increases with increasing plasticity. High dry strength is characteristic for clays of the CH group. A typical inorganic silt possesses only very slight dry strength. Silty fine sands and silts have about the same slight dry strength, but can be distinguished by the feel when powdering the dried specimen. Fine sand feels gritty whereas a typical silt has the smooth feel of flour. Calcium carbonate or iron oxides may cause higher dry strength in dried material. If acid causes a fizzing reaction, calcium carbonate is present. Dilatancy (Reaction to shaking) After removing particles larger than No. 40 sieve size, prepare a pat of moist soil with a volume of about one-half cubic inch. Add enough water if necessary to make the soil soft but not sticky. Place the pat in the open palm of one hand and shake horizontally, striking vigorously against the other hand several times. A positive reaction consists of the appearance of water on the surface of the pat which changes to a livery consistency and becomes glossy. When the sample is squeezed between the fingers, the water and gloss disappear from the surface, the pat stiffens, and finally it cracks or crumbles. The rapidity of appearance of water during shaking and of its disappearance during squeezing assist in identifying the character of the fines in a soil. Very fine clean sands give the quickest and most distinct reaction whereas a plastic clay has no reaction. Inorganic silts, such as a typical rock flour, show a moderately quick reaction. Toughness (Consistency near plastic limit) After removing particles larger than No. 40 sieve size, a specimen of soil about one-half inch cube in size, is molded to the consistency of putty. If too dry, water must be added and if sticky, the specimen should be spread out in a thin layer and allowed to lose some moisture by evaporation. Then the specimen is rolled out by hand on a smooth surface or between the palms, into a thread about one-eighth inch in diameter. The thread is then folded and rerolled repeatedly. During this manipulation the moisture content is gradually reduced and the specimen stiffens, finally loses its plasticity, and crumbles when the plastic limit is reached. After the thread crumbles, the pieces should be lumped together and a slight kneading action continued until the lump crumbles. The tougher the thread near the plastic limit and the stiffer the lump when it finally crumbles, the more potent is the colloidal clay fraction in the soil. Weakness of the thread at the plastic limit and quick loss of coherence of the lump below the plastic limit indicate either inorganic clay of low plasticity, or materials such as kaolin-type clays and organic clays which occur below the A-line. Highly organic clays have a very weak and spongy feel at the plastic limit. Non-plastic soils cannot be rolled into a thread at any moisture content. The toughness increases with the P.I.	COARSE GRAINED SOILS	For undisturbed soils add information on stratification, degree of compactness, cementation, moisture conditions and drainage characteristics. Give typical name; indicate approximate percentages of sand and gravel, maximum size; angularity, surface condition, and hardness of the coarse grains; local or geologic name and other pertinent descriptive information; and symbol in parentheses. Example: Silty sand, gravelly; about 20% hard, angular gravel particles ½ in. maximum size; rounded and subangular sand grains coarse to fine; about 15% nonplastic fines with low dry strength; well compacted and moist in place; alluvial sand; (SM).	GW GP GM GC SW SP SM SC
	FINE GRAINED SOILS	Give typical name, indicate degree and character of plasticity, amount and maximum size of coarse grains, color in wet condition, odor if any, local or geologic name, and other pertinent descriptive information; and symbol in parentheses. For undisturbed soils add information on structure, stratification, consistency in undisturbed and remolded states, moisture and drainage conditions. Example: Clayey silt, brown, slightly plastic, small percentage of fine sand, numerous vertical root holes, firm and dry in place, loess, (ML).	ML CL OL MH CH OH
	ORGANIC SOILS		Pt

Dilatancy test

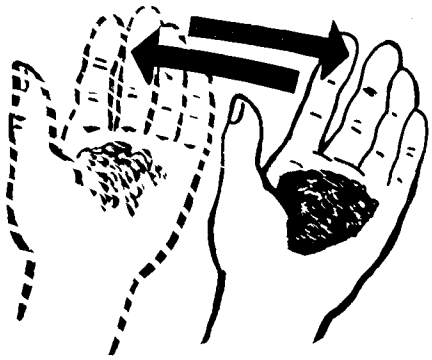

Shaking wet soil

Dry strength test

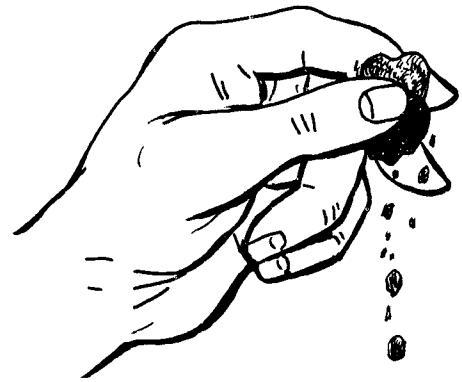

Crumbling dry sample between fingers.

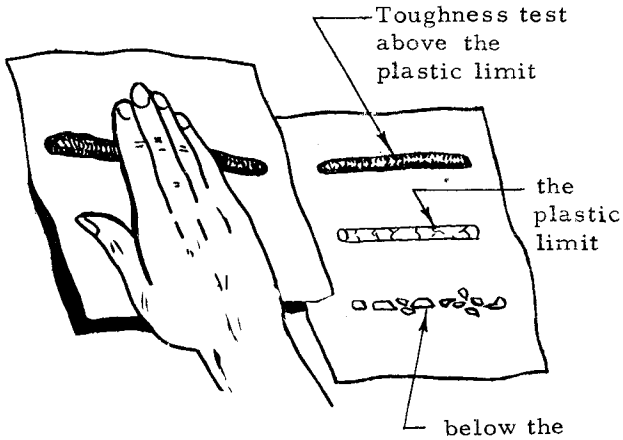

Rolling soil into threads

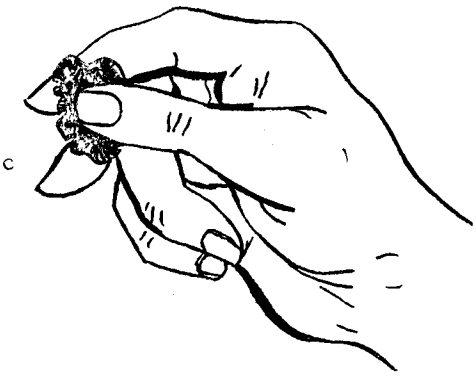

Remolding tough thread at plastic limit into lump and deforming.

Figure 1-5.--Field Tests

or fine-grained. The division between coarse and fine grain is the 200 mesh sieve.

2. If fine-grained, see step 6 below. If coarse-grained, classify as gravel or sand, i.e., classify as gravel if more than 50 percent of coarse fraction is larger than No. 4 sieve (about 1/4 inch) and sand, if more than 50 percent of coarse fraction is smaller than No. 4 sieve.

3. If gravel or sand, determine whether it is "clean" having less than 5 percent fines; borderline, having 5 to 12 percent fines; or "dirty" having more than 12 percent fines. Fines are defined as the fraction smaller than the 200 mesh sieve size. Less than 5 percent fines will not stain the hands when wet.

4. If the gravel or sand is clean, decide if it is well graded (W) or poorly graded (P) and assign an appropriate group name and symbol: GW, GP, SW, or SP. Well graded materials have a good representation of all particle sizes. Poorly graded materials have an excess or absence of intermediate particle sizes.

5. If the gravel or sand contains more than 12 percent fines, it is classified as GM, GC, SM, or SC, depending upon the type of fines. The procedure for identifying type of fines is given in the following steps: Borderline cases, where fines range from 5 to 12 percent, are classified in the laboratory with dual symbols, i.e., GP-GC, SP-SC. Classification of borderline cases, as well as boundary cases between various groups, require precise laboratory analysis for proper classification. Such analyses cannot be made in the field. When field classification indicates that material might fall into one of two classifications, both symbols should be indicated, such as (GP or GC) or (SW or SP).

6. For fine-grained soils or the fine-grained fraction of a coarse-grained soil, the "dilatancy," "dry strength," and "toughness" tests are performed in accordance with the instructions given on the left-hand side of table 1-7. The group name and symbol are arrived at by selection of that group, the characteristics of which most nearly compare to that of the sample. These characteristics are shown in the lower part of table 1-6.

7. Highly organic soils are classified as peat (Pt). These are identified by color, odor, spongy feel and fibrous texture.

8. Fine-grained soils which have characteristics of two groups, either because of percentage of the coarse-grained components or plasticity characteristics, are given boundary classifications in the same way as coarse-grained soils. Boundary classifications which are common for fine-grained soils are (ML or MH), (CL or CH),

(OL or OH), (CL or ML), (MH or CH). Common boundary classifications between coarse and fine grained soils are (SM or ML) and (SC or CL).

9. Miscellaneous tests and criteria may be used to identify the occurrence of other substances and constituents. Some of these are outlined under Field Tests, pages 1-20 to 1-21.

Table 1-6, Field Identification Criteria, lists in tabular form the classification characteristics of the soil groups. The engineering geologist can only estimate the primary constituents of unconsolidated material in the Unified Soil Classification System. More exact mechanical analyses must be made in the laboratory. However, when the laboratory analyses become available, they should be compared with the original field estimates. In this way the geologist can improve the accuracy of his estimates.

Tables 1-8, 1-9, and 1-10, Engineering Properties of Unified Soil Classes, presents a general evaluation of the engineering properties of the various classes. They provide guidance in determining the suitability of a given soil for various engineering purposes.

Table 1-8.--Engineering Properties of Unified Soil Classes

TYPICAL NAMES	IMPORTANT PROPERTIES						UNIFIED SOIL CLASSES
	SHEAR STRENGTH	COMPRESS-IBILITY	WORKABILITY AS CONSTRUCTION MATERIAL	PERMEABILITY			
				WHEN COMPACTED	K CM. PER SEC.	K FT. PER DAY	
Well graded gravels, gravel-sand mixtures, little or no fines.	Excellent	Negligible	Excellent	Pervious	$K > 10^{-2}$	$K > 30$	**GW**
Poorly graded gravels, gravel-sand mixtures, little or no fines.	Good	Negligible	Good	Very Pervious	$K > 10^{-2}$	$K > 30$	**GP**
Silty gravels, gravel-sand-silt mixtures.	Good to Fair	Negligible	Good	Semi-Pervious to Impervious	$K = 10^{-3}$ to 10^{-6}	$K = 3$ to 3×10^{-3}	**GM**
Clayey gravels, gravel-sand-clay mixtures.	Good	Very Low	Good	Impervious	$K = 10^{-6}$ to 10^{-8}	$K = 3 \times 10^{-3}$ to 3×10^{-5}	**GC**
Well graded sands, gravelly sands, little or no fines.	Excellent	Negligible	Excellent	Pervious	$K > 10^{-3}$	$K > 3$	**SW**
Poorly graded sands, gravelly sands, little or no fines.	Good	Very Low	Fair	Porvious	$K > 10^{-3}$	$K > 3$	**SP**
Silty sands, sand-silt mixtures.	Good to Fair	Low	Fair	Semi-Pervious to Impervious	$K = 10^{-3}$ to 10^{-6}	$K = 3$ to 3×10^{-3}	**SM**
Clayey sands, sand-clay mixturcs.	Good to Fair	Low	Good	Impervious	$K = 10^{-6}$ to 10^{-8}	$K = 3 \times 10^{-3}$ to 3×10^{-5}	**SC**
Inorganic silts and very fine sands, rock flour, silty or clayey fine sands or clayey silts with slight plasticity.	Fair	Medium to High	Fair	Semi-Pervious to Impervious	$K = 10^{-3}$ to 10^{-6}	$K \doteq 3$ to 3×10^{-3}	**ML**
Inorganic clays of low to medium plasticity, gravelly clays, sandy clays, silty clays, lean clays.	Fair	Medium	Good to Fair	Impervious	$K = 10^{-6}$ to 10^{-8}	$K = 3 \times 10^{-3}$ to 3×10^{-5}	**CL**
Organic silts and organic silty clays of low plasticity.	Poor	Medium	Fair	Semi-Pervious to Impervious	$K = 10^{-4}$ to 10^{-6}	$K = 3 \times 10^{-1}$ to 3×10^{-3}	**OL**
Inorganic silts, micaceous or diatomaceous fine sandy or silty soils, elastic silts.	Fair to Poor	High	Poor	Semi-Pervious to Impervious	$K = 10^{-4}$ to 10^{-6}	$K = 3 \times 10^{-1}$ to 3×10^{-3}	**MH**
Inorganic clays of high plasticity, fat clays.	Poor	High to Very High	Poor	Impervious	$K = 10^{-6}$ to 10^{-8}	$K = 3 \times 10^{-3}$ to 3×10^{-5}	**CH**
Organic clays of medium to high plasticity, organic silts.	Poor	High	Poor	Impervious	$K = 10^{-6}$ to 10^{-8}	$K = 3 \times 10^{-3}$ to 3×10^{-5}	**OH**
Peat and other highly organic soils.	NOT SUITABLE FOR CONSTRUCTION						**Pt**

Table 1-9.--Engineering Properties of Unified Soil Classes for Embankments

EMBANKMENTS								UNIFIED SOIL CLASSES
COMPACTION CHARACTER-ISTICS	STANDARD PROCTER UNIT DENSITY LBS. PER CU. FT.	TYPE OF ROLLER DESIRABLE	RELATIVE CHARACTERISTICS		RESISTANCE TO PIPING	ABILITY TO TAKE PLASTIC DEFORMATION UNDER LOAD WITHOUT SHEARING	GENERAL DESCRIPTION & USE	
			PERME-ABILITY	COMPRESS-IBILITY				
Good	125-135	crawler tractor or steel wheeled & vibratory	High	Very Slight	Good	None	Very stable, pervious shells of dikes and dams.	GW
Good	115-125	crawler tractor or steel wheeled & vibratory	High	Very Slight	Good	None	Reasonably stable, pervious shells of dikes and dams.	GP
Good with close control	120-135	rubber-tired or sheepsfoot	Medium	Slight	Poor	Poor	Reasonably stable, not well suited to shells but may be used for impervious cores or blankets.	GM
Good	115-130	sheepsfoot or rubber-tired	Low	Slight	Good	Fair	Fairly stable, may be used for impervious core.	GC
Good	110-130	crawler tractor & vibratory or steel wheeled	High	Very Slight	Fair	None	Very stable, pervious sections, slope protection required.	SW
Good	100-120	crawler tractor & vibratory or steel wheeled	High	Very Slight	Fair to Poor	None	Reasonably stable, may be used in dike with flat slopes.	SP
Good with close control	110-125	rubber-tired or sheepsfoot	Medium	Slight	Poor to Very Poor	Poor	Fairly stable, not well suited to shells, but may be used for impervious cores or dikes.	SM
Good	105-125	sheepsfoot or rubber-tired	Low	Slight	Good	Fair	Fairly stable, use for impervious core for flood control structures.	SC
Good to Poor Close control essential	95-120	sheepsfoot	Medium	Medium	Poor to Very Poor	*Very Poor	Poor stability, may be used for embankments with proper control. *Varies with water content.	ML
Fair to Good	95-120	sheepsfoot	Low	Medium	Good to Fair	Good to Poor	Stable, impervious cores and blankets.	CL
Fair to Poor	80-100	sheepsfoot	Medium to Low	Medium to High	Good to Poor	Fair	Not suitable for embankments.	OL
Poor to Very Poor	70-95	shcepsfoot	Medium to Low	Very High	Good to Poor	Good	Poor stability, core of hydraulic fill dam, not desirable in rolled fill construction.	MH
Fair to Poor	75-105	sheepsfoot	Low	High	Excellent	Excellent	Fair stability with flat slopes, thin cores, blanket & dike sections.	CH
Poor to Very Poor	65-100	sheepsfoot	Medium to Low	Very High	Good to Poor	Good	Not suitable for embankments.	OH
DO NOT USE FOR EMBANKMENT CONSTRUCTION								Pt

Table 1-10.--Engineering Properties of Unified Soil Classes for Foundations and Channels

CHANNELS LONG DURATION TO CONSTANT FLOWS.		FOUNDATION FOUNDATION SOILS, BEING UNDISTURBED, ARE INFLUENCED TO A GREAT DEGREE BY THEIR GEOLOGIC ORIGIN. JUDGEMENT AND TESTING MUST BE USED IN ADDITION TO THESE GENERALIZATIONS.					UNIFIED SOIL CLASSES
RELATIVE DESIRABILITY			RELATIVE DESIRABILITY		REQUIREMENTS FOR SEEPAGE CONTROL		
EROSION RESISTANCE	COMPACTED EARTH LINING	BEARING VALUE	SEEPAGE IMPORTANT	SEEPAGE NOT IMPORTANT	PERMANENT RESERVOIR	FLOODWATER RETARDING	
1	-	Good	-	1	Positive cutoff or blanket	Control only within volume acceptable plus pressure relief if required.	**GW**
2	-	Good	-	3	Positive cutoff or blanket	Control only within volume acceptable plus pressure relief if required.	**GP**
4	4	Good	2	4	Core trench to none	None	**GM**
3	1	Good	1	6	None	None	**GC**
6	-	Good	-	2	Positive cutoff or upstream blanket & toe drains or wells.	Control only within volume acceptable plus pressure relief if required.	**SW**
7 if gravelly	-	Good to Poor depending upon density	-	5	Positive cutoff or upstream blanket & toe drains or wells.	Control only within volume acceptable plus pressure relief if required	**SP**
8 if gravelly	5 erosion critical	Good to Poor depending upon density	4	7	Upstream blanket & toe drains or wells	Sufficient control to prevent dangerous seepage piping.	**SM**
5	2	Good to Poor	3	8	None	None	**SC**
-	6 erosion critical	Very Poor, susceptible to liquefication	6, if saturated or pre-wetted	9	Positive cutoff or upstream blanket & toe drains or wells.	Sufficient control to prevent dangerous seepage piping.	**ML**
9	3	Good to Poor	5	10	None	None	**CL**
-	7 erosion critical	Fair to Poor, may have excessive settlement	7	11	None	None	**OL**
-	-	Poor	8	12	None	None	**MH**
10	8 volume change critical	Fair to Poor	9	13	None	None	**CH**
-	-	Very Poor	10	14	None	None	**OH**
-	-	REMOVE FROM FOUNDATION					**Pt**

No. 1 is best numerical rating.

NATIONAL ENGINEERING HANDBOOK
SECTION 8
ENGINEERING GEOLOGY

CHAPTER 2 - EXPLORATION METHODS AND EQUIPMENT

CONTENTS

	Page
Introduction	2- 1
Exposed Profiles	2- 1
Natural Exposures	2- 1
Trenching and Test Pitting	2- 1
General	2- 1
Trenches	2- 2
Test Pits	2- 2
Procedures for Obtaining Undisturbed Samples from Exposed Profiles	2- 2
Bore Holes	2- 6
General	2- 6
Hand-auger Borings	2- 6
Power-auger Borings	2- 6
Percussion or Churn Drilling	2- 7
Wash Borings	2- 7
Displacement Borings	2- 7
Rotary Drilling	2- 8
Geophysical Methods	2- 8
Seismic	2- 9
Electrical Resistivity	2-11
Field Penetration Test	2-13
Application	2-15
Equipment	2-15
Drilling Equipment	2-15
Split-tube Sampler	2-15
Hammer	2-15
Procedure	2-17
Cleaning Hole	2-17
Standard Penetration Test	2-17
Vane Shear	2-17
Permeability Investigations	2-17
Pressure Tests	2-19
Pressure-testing Equipment	2-19
Pressure-testing Procedure	2-19
Pumping-in Tests	2-22
Open-end Tests	2-22
Packer Tests	2-25
Well Permeameter Method	2-29

Page

Soil-Sampling Tools 2-38
General 2-38
Open-drive and Piston Samplers 2-38
Thin-wall Open-drive Samplers 2-38
Thin-wall sampling procedure 2-42
Piston-drive Samplers 2-44
Piston-sampling procedure 2-44
Split-barrel Sampler 2-46
Split-barrel sampling procedure 2-47
Double-Tube Soil Core Barrel Sampler 2-47
Bit speed 2-50
Bit pressure 2-50
Double-tube soil core barrel sampling procedures 2-51

Rock-sampling Tools 2-52
Double-Tube Rock Core Barrel Sampler 2-52
Rock core bits 2-52
Rock core bit speed 2-58
Rock core bit pressure 2-58
Drilling fluids 2-58
Hole cleaning 2-59
Core recovery 2-59
General considerations for rock coring 2-60

Tools for Advancing Bore Holes 2-61
Auger Bits 2-61
Barrel Auger 2-62
Chopping, Fishtail and Jetting Bits 2-62
Roller Bits 2-62

Other Drilling Equipment 2-66
General 2-66
Drive Hammers 2-66
Drill Rod and Couplings 2-66
Clean-out Tools 2-68
Hole-bailer 2-68
Hole cleaner 2-68
Sample Catch Pan 2-68
Barrel Rack 2-68
Slush Pits 2-68

Miscellaneous Equipment 2-69
Water and Tool Trucks 2-69
Mobile Trailer 2-69
Miscellaneous Items 2-69

Drill Rigs 2-69

Stabilizing Bore Holes 2-74
Casing 2-74
Drilling Fluids 2-74

FIGURES

Number	Title	Page
2-1	Method of Obtaining Cylinder Samples	2-3
2-2	Chunk Samples	2-4
2-3	Box Samples	2-5
2-4	Velocities of Longitudinal or Compression Waves	2-10
2-5	Seismic Refraction Methods	2-12
2-6	Diagram of Resistivity Apparatus	2-14
2-7	Split-barrel Sampler	2-16
2-8	Idealized Vane Shear Apparatus	2-18
2-9	Sample Plots of Pressure-test Data	2-20
2-10	Pressure-testing Tool	2-21
2-11	Open-end Permeability Test	2-24
2-12	Packer-type Permeability Test	2-27
2-13	Well-permeameter Test	2-31
2-14	Thin-wall Open-drive Sampler	2-41
2-15	Stationary-piston Sampler	2-45
2-16	Double-tube Soil Core Barrel	2-49
2-17	Long and Short Rock Core Barrel	2-53
2-18	Swivel-type Double-Tube Rock Core Barrels	2-54
2-19	Diamond Bits and Reaming Shells	2-57
2-20	Various Types of Bucket-auger Bits	2-63
2-21	Dry Barrel Sampler	2-64
2-22	Various Types of Fishtail and Roller Bits	2-65
2-23	Drive Hammer and Drive Head Diagram	2-67
2-24	Hole Bailer and Clean-out Augers	2-70
2-25	Barrel Rack with Barrel in Place	2-71
2-26	Miscellaneous Equipment	2-72
2-27	Rotary Drilling Rig	2-72

TABLES

Number	Title	Page
2-1	Standard Penetration Resistance	2-15
2-2	Arc Hyperbolic Sines of Numbers from 0.5 to 4.9	2-28
2-3	Natural Logarithms of Numbers from 10 to 99	2-28
2-4	Temperature Correction Factors	2-32
2-5	Minimum Volume, in gallons, to be Discharged in Well Permeameter	2-34
2-6	Arc Hyperbolic Sines	2-36
2-7	Recommended Logging and Sampling Tools with Minimum Diameter	2-39
2-8	Soil Types and Sampling Tools	2-40
2-9	General Recommendations for Thin-walled Drive Sampling	2-43
2-10	Standard Sized of Coring Bits and Barrels, Casing and Drill Rods	2-55
2-11	Approximate Proportions of Mud Mixtures	2-76

NATIONAL ENGINEERING HANDBOOK

SECTION 8

ENGINEERING GEOLOGY

CHAPTER 2. EXPLORATION METHODS AND EQUIPMENT

Introduction

This chapter outlines briefly the various methods of subsurface exploration applicable to SCS work and describes types of cutting and sampling tools and other equipment needed to conduct geologic investigations of dam sites.

Exposed Profiles

Natural Exposures

A complete investigation of formations in natural exposures at the surface is necessary to provide a basis for subsurface investigations and to eliminate unnecessary drilling. Natural exposures, when described in detail, serve the same purpose as other logs in establishing stratigraphy and other geologic conditions. A fresh surface is required for the preparation of adequate descriptions. An ordinary hand shovel or geologist's pick may be required for preparing the surface of a natural exposure.

Trenching and Test Pitting

General - Trenching and test pitting are simple methods of shallow exploration of easily excavated rock or soil materials which permit visual inspection of strata. This is of great value in logging profiles and selecting samples. If bedrock is anticipated at a shallow depth, trenches and test pits should be located on the centerline of the structure and dug parallel with it.

If bedrock is not at shallow depths, deep trenches or test pits should be offset from the centerline to avoid damaging the foundation of the structure. Shallow trenches or test pits may be dug adjacent to the centerline for correlation purposes.

In cases where pits or trenches penetrate or pass through materials which will constitute the foundation, it is a requisite that backfilling be performed in such a manner as to obtain soil densities (compaction) at least equal to the density of the original, in-place material. It is recognized that certain limitations exist in the use of trenching and test-pit excavating equipment for compacting fill material. However, every practical effort should be made to re-establish the in-place densities of foundation materials.

Trenches - Trenches imply long, narrow excavations. They are advantageous for studying the various formations on steep slopes and in exposed faces. Trenches made by power equipment, such as backhoes, draglines, and bulldozers, may require hand trimming of the sides and bottom to reach relatively undisturbed material.

The method is of particular value in delineating the rock surface beneath the principal spillway and in abutments and in exploring emergency spillway materials. In materials containing many cobbles or boulders, where drilling is difficult, trenching may be the most feasible method of investigation. On the centerline of the dam, trenches may yield valuable information on rock excavation and core trench depth, especially where thin-bedded or flaggy rocks are found near the surface.

Test pits - Test pits are rectangular or circular excavations large enough to admit a man with sampling equipment. They may be excavated by hand or by the use of power equipment such as a clamshell or orange-peel bucket. Power equipment should be used only for rough excavation and with extreme caution when approaching the depths at which undisturbed samples are to be taken. Cribbing is required in unstable ground and for deep pits.

The advantages of test pitting are about the same as for trenching, but have the added advantage of being adaptable to greater depths at less cost. Disadvantages include time loss and cost where cribbing is necessary. With adequate dewatering equipment, they can be extended below the water table and with cribbing they can penetrate unstable materials.

Procedures for Obtaining Undisturbed Samples from Exposed Profiles

Undisturbed hand-cut samples can be obtained above the water table from nearly all types of materials with less disturbance than by other means.

Undisturbed samples may be obtained as box, cylinder, or chunk samples. Box samples are hand-cut and trimmed to cubical dimensions and sealed in individual boxes for handling and shipping. They should have a minimum dimension of six inches. Cylinder samples from four to eight inches in diameter and six to twelve inches long can also be hand-cut by sliding a cylinder over a column of soil which is trimmed to approximate size in advance of the cylinder. Cylinder samples may also be obtained by jacking or otherwise pushing thin-wall drive samples into exposed surfaces using a continuous steady pressure. Chunk samples are of random size and shape and are broken away from the soil mass with or without trimming. They are difficult to package and ship but are simple to obtain.

Figures 2-1, 2-2, and 2-3 demonstrate the methods of obtaining and packaging hand-cut samples.

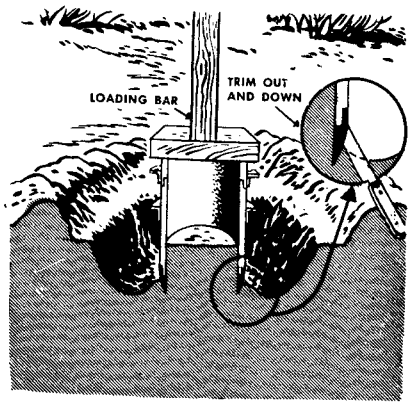

Press mold down over soil firmly, using loading bar if necessary. Carefully trim soil away from sampling collar with knife. Cut downward and outward to avoid cutting into sample. The actual cutting to size is done with sampling collar.

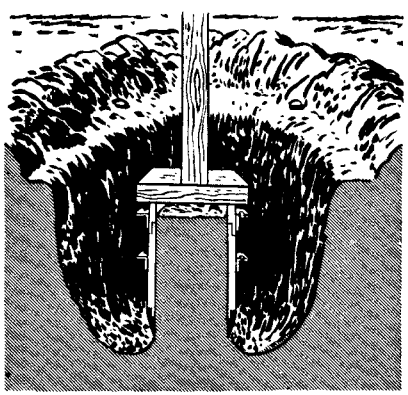

Excavate trench deeper and repeat process until soil penetrates well into extension collar.

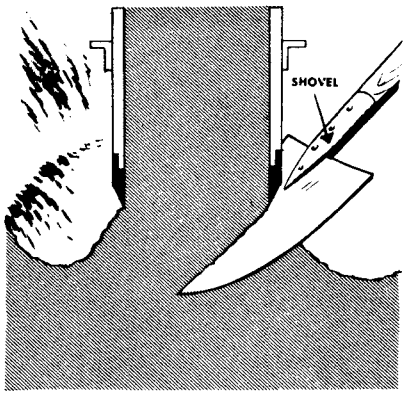

Cut off sample at bottom of mold with shovel, butcher knife, or wire saw and remove from hole.

Remove upper collar and trim top surface of sample; then turn mold upside down, remove sampling collar, and trim bottom. The top and bottom surfaces must be trimmed level with ends of mold. Protect ends with wood discs and tape around edges.

NOTE: If stones interfere, pick them out carefully and backfill with soil. Record this fact in log of sample whenever this is done.

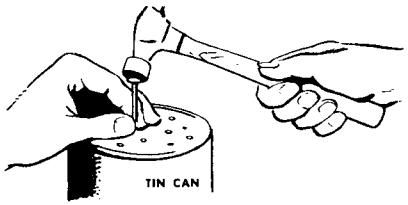

1. Punch holes in bottom of can.

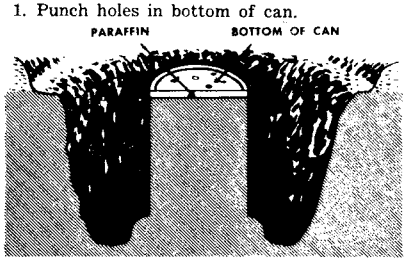

2. Excavate around can in the same way as for compaction mold and press down until soil penetrates to bottom of can.

3. Pour paraffin in holes and seal bottom of can. Cut off sample with butcher knife and remove from hole.

4. Cut surface about ½-inch below top of can and fill with paraffin.

Figure 2-1 Methods of Obtaining Cylinder Samples

To obtain a chunk sample from a subgrade or other level surface such as the bottom of a test pit:

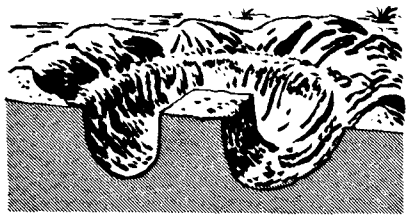

1. Smooth ground surface and mark outline of chunk.
2. Excavate trench around chunk.

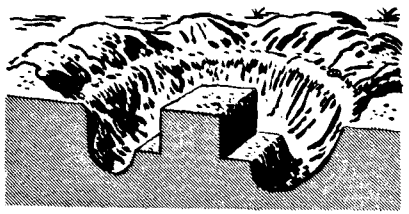

3. Deepen excavation and trim sides of chunk with butcher knife.

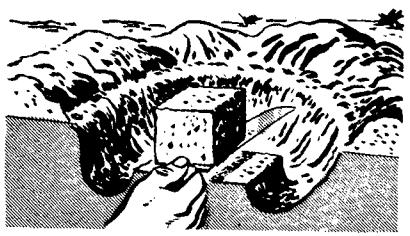

4. Cut off chunk with butcher knife, trowel, or hacksaw blade and carefully remove from hole.

To obtain a chunk sample from the vertical face of a test pit or shovel cut:

1. Carefully smooth face surface and mark outline of chunk.

2. Excavate around and in back of chunk. Shape chunk roughly with butcher knife.

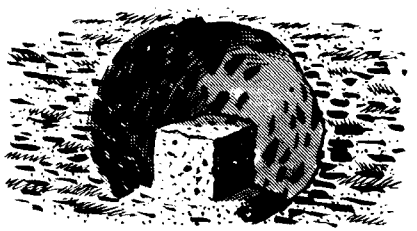

3. Cut off chunk and carefully remove from hole.

To seal chunk after removing it from hole:

1. Trim and shape rough edges with butcher knife.

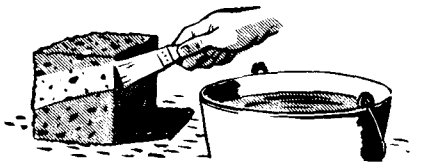

2. Apply three coats of paraffin with paint brush. Allow each coat to cool and become firm before applying next coat.

NOTE: This gives adequate protection for strong samples that are to be used within a few days. Samples that are weak or may not be used soon require additional protection.

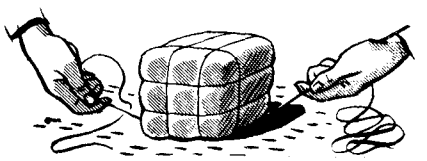

3. Wrap with cheesecloth or other soft cloth. If cloth is not available, reinforce with several loops of friction tape or twine.

4. Apply three more coats of paraffin.

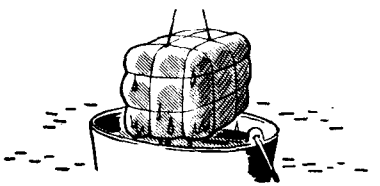

NOTE: A better method is to dip entire sample in melted paraffin after first brush coat is applied. This requires a large container and more paraffin, but gives a more uniform coating. By repeated dipping, paraffin can be built up to a minimum ⅛-inch thickness.

Figure 2-2. Chunk Samples

Box Samples

Box samples are sometimes used for large undisturbed samples requiring extensive investigation. They can be firmly packed for shipment or storage, but require considerable paraffin.

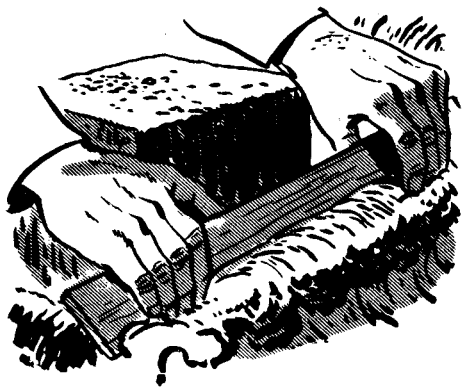

To obtain a box sample:

1. Excavate as for a chunk sample, then trim sample to size slightly smaller than box.

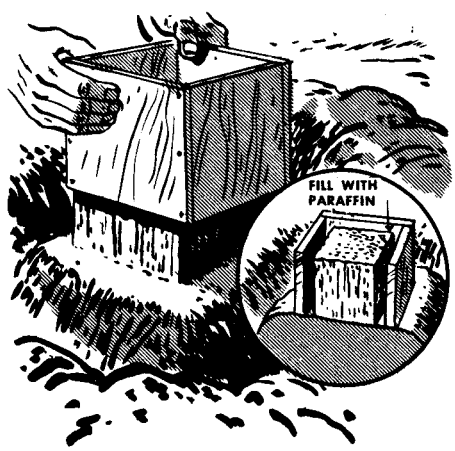

2. Remove top and bottom from box and place over sample.
3. Fill sides with paraffin, then pour paraffin over top of sample and replace bottom.

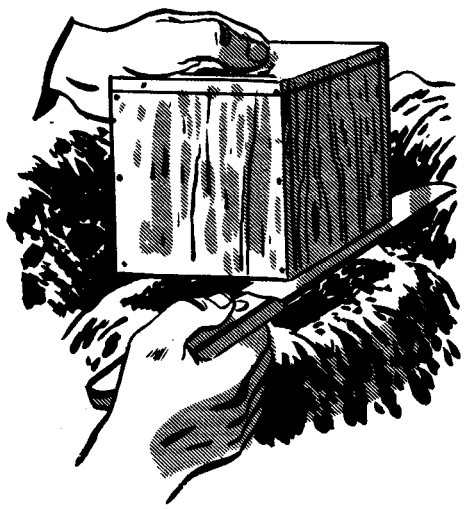

4. Cut off sample, remove box containing sample from hole, and turn right side up.

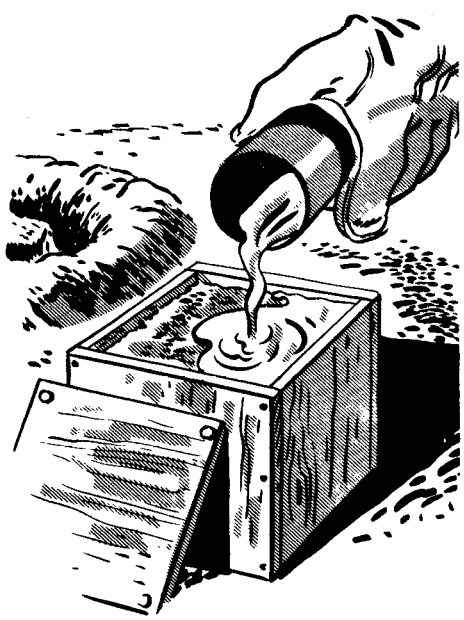

5. Trim surface of sample and seal with melted **paraffin**, then replace lid.

Figure 2-3. Box Samples

Bore Holes

General

Bore holes represent a common method of exploration in making sub-surface investigations. Various types of drilling equipment and tools are available for advancing bore holes. Bore holes are advanced for (1) general investigation during preliminary examination, (2) obtaining representative disturbed samples, (3) for advancing and cleaning holes to specific horizons for logging, sampling, or conducting tests, (4) for advancing holes to bedrock to delineate rock surfaces, and (5) for installing piezometers and relief wells, Only the more common methods of boring for SCS work are described in this section.

Hand-auger Borings

Hand augers are useful for advancing holes to shallow depths for preliminary examination of sites. They may be used to depths up to 20 feet. Beyond that depth they become cumbersome to handle and boring is slow. Usually a bucket-type hand auger is found to be most useful because it provides samples for inspection without the excessive mixing of materials which occurs when a helical or wormtype bit is used.

Several kinds of motorized hand augers (post-hole augers) are available on the market. Although a shallow hole can be advanced rapidly with this type of equipment, the limitations in use are similar to those of hand augers.

Power-auger Boring

Power augers mounted on trucks or jeeps are used for dry boring in unconsolidated materials. Bore holes are advanced by rotating a cutting bit into the materials. A wide variety of materials may be bored with power augers. They are not suitable for use in materials containing cobbles or gravel, hard or cemented soils, or saturated cohesionless soils. Unstable materials require casing particularly below the water table.

In power-auger boring, materials are brought to the surface by lifting the bit and removing materials contained therein, or, by use of a continuous flight or helical auger which spirals the material to the surface by mechanical means. Raising the bit for cleaning each time results in slow advancement of holes. However, it facilitates inspection of materials from strata of known depth. The continuous flight auger provides a more rapid method of advancing holes. The material brought to the surface is badly mixed by the action of the flight auger and correlation with depth is always questionable so that definite identification and location of changes of strata is not possible.

The use of power augers usually leaves the hole clean and dry above the water table and the materials in the bottom of the hole relatively undisturbed.

Percussion or Churn Drilling

Percussion or churn drilling is an inexpensive method of advancing bore holes through hard consolidated soils, rock, coarse gravel deposits, or formations containing boulders. It is often used in conjunction with auger boring.

The hole is drilled by the impact and cutting action of a heavy, chisel-edged drilling tool that is alternately raised and dropped by means of a cable attached to a walking arm, "jerkline," crank, or other means of raising and dropping the cable and tools.

A small amount of water in the bore hole permits the loosened rock and soil to be mixed into a slurry as the hole is advanced. When the carrying capacity of the slurry is reached, the drilling bit is removed from the hole and the slurry removed by means of a bailer or sand pump, usually operated by a separate winch and light cable or "sand line." When drilling clay materials, the addition of sand will augment the cutting action of the bit. Also, when drilling in cohesionless materials, the addition of clay will increase the carrying capacity of the slurry.

Except in extremely stable materials, churn-drill holes usually require casing. It is desirable that the hole be advanced ahead of the casing, but this is often impossible in soft or sandy soils. Because of mixing of materials, the materials removed from the hole are non-representative and inadequate for delineation of particular strata.

Wash Borings

A wash boring is a means of rapidly advancing a hole by a striking or rotating, cutting or chopping tool and by jetting with water which is pumped through the hollow drill rod and bit. The method usually requires use of casing. Cuttings are removed from the hole by the water circulating upward between drill rod and casing. The cutting tool is alternately raised and dropped by tightening and slacking of a line wrapped around a cathead. A tiller attached to the drill rod permits rotating the rod and cutting tool. The material brought to the surface in the circulating water is non-representative of materials in place. Consequently, positive identification of particular strata is not possible when holes are advanced by the wash-boring method.

Displacement Borings

This method consists of forcing a tube into soil materials and withdrawing material which is retained inside the tube. Tubes may be driven by use of a drive hammer or pushed using a jack or hydraulic cylinders against the weight of the rig. Displacement

boring can be made in clays. silts and relatively stable materials free from gravel, cobbles, and boulders. The sampler, when withdrawn, acts as a piston in the hole causing more excessive caving than other methods of boring. Although highly recommended for logging purposes, continuous drive boring represents a slow method of advancing holes when needed for purposes other than loggine. Even minor changes in soil materials can readily be detected by extruding samples from the tubes. However, when used for logging purposes, the hole should be advanced by other means, such as auger boring, and tubes smaller than the hole diameter should be used in order to provide wall clearance. Displacement boring for advancing holes is generally impractical for diameters larger than three inches.

Rotary Drilling

In rotary drilling, the bore hole is advanced by rapid mechanical rotation of the drilling bit which cuts, chips, and grinds the material at the bottom of the hole into small particles. The cuttings are normally removed by pumping water or drilling fluid, from a sump, down through the drill rods and bit and up through the hole, from which it flows into a settling pit and back to the sump. Compressed air is available on many newer rigs to remove the cuttings from the hole. However, this is not very satisfactory in wet formations which are frequently encountered in dam site investigations.

A reverse water circulation is employed on rigs used to drill large-diameter holes such as water wells. In this case the drilling fluid passes down through the hole and up through the drill rods. The higher upward velocity of the fluid through the drill rods facilitates removal of cuttings from large holes.

Holes can be advanced in a wide variety of materials, including sound rock, by rotary-drilling methods. Rotary drilling may be the only practical method of advancing holes and obtaining undisturbed core samples from certain types of soil and rock materials. Rotary-drilling equipment is versatile. Any of the foregoing methods of advancing holes can be used with rotary-drilling equipment.

Geophysical Methods

Geophysical methods may be used to supplement test holes for geologic exploration. It is desirable to have a limited number of test holes for interpretation of results obtained by geophysical procedures. Geophysical methods are rapid and economical and may reduce the number of test holes that are required at a particular site to establish geologic continuity. With test hole control, geophysical methods may be helpful in delineating the bedrock profile and determining the continuity of strata between borings for certain types of geologic conditions.

Seismic

The seismic refraction method is based on the variable rate of transmission of seismic or shock waves through materials of varying densities composing the earth's crust. The nature of material is inferred from the rate of transmission of sound. Typical rates of transmission for different types of materials are shown in Figure 2-4.

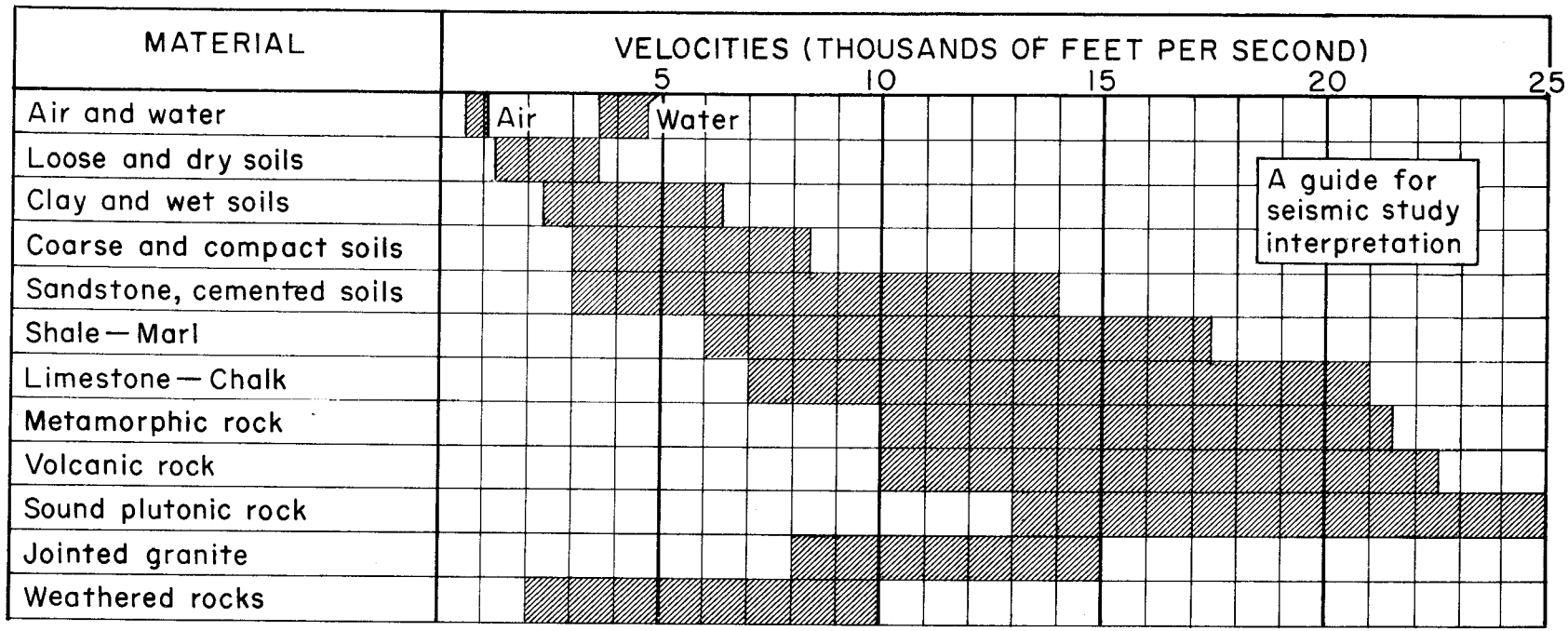

Figure 2-4. Velocities of Longitudinal or Compression Waves.

Hvorslev, M.J., ASCE, Nov. 1949

Several types of operating procedures have been developed. In one method, small explosive charges are set off in shallow holes. The seismic wave so generated is picked up and its time of arrival is recorded at several surface detecting points. The travel time of the wave to these recording points is measured and the wave velocity of different strata may be calculated. From these data the depths and probable character of various beds or layers can be inferred. See Figure 2-5 for schematic drawing.

Light-weight portable refraction seismographs have been developed which accurately measure the time interval for travel of a sound wave from a source to the instrument. In this method the shock wave is created by a sledge hammer blow on the ground and is picked up by a geophone. These portable units may be equipped with one or more geophones. The mechanical energy of the wave is transformed by the geophone into an electrical signal which in turn is fed into the receiver. The time interval of the seismic wave is read directly on the instrument by means of binary counters or is recorded on film or paper.

The velocity of the wave is then computed from the registered time and the distance of the hammer from the instrument. Changes in the physical characteristics of underlying materials are indicated by the changes in velocities (distance/time) recorded by the instrument.

The instrument, when the shock wave is created by a hammer blow, is limited to depths of about 50 feet and to rather simple problems of geology. For example: (1) a single discontinuity between two formations, (2) dipping discontinuity, and (3) two horizontal discontinuities, providing each formation becomes progressively denser with depth. Because the velocity of sound in water is about 5,000 fps., groundwater tables can be delineated in formations having seismic velocities less than that of water. The equipment is relatively inexpensive compared to seismographs used for oil and mineral exploration work. Although used only to a limited extent in foundation exploration, it appears to have possibilities for preliminary studies and for reducing the number of test holes needed to extrapolate continuity.

Electrical Resistivity

The resistivity, or electrical resistance, of earth materials can be determined readily by causing an electrical current to flow through the materials being tested. Usually, four electrodes are set in the ground in a line and at an equal distance apart. A set of batteries and a milliammeter are connected in series with the outer pair of electrodes. These are the two current electrodes. A potentiometer for measuring voltage is connected with the inner pair of electrodes. They are the potential electrodes. In many types of instruments a device, such as a commutator, is incorporated in the circuit

MULTI - TRACE RECORDING
REFRACTION SEISMOGRAPH

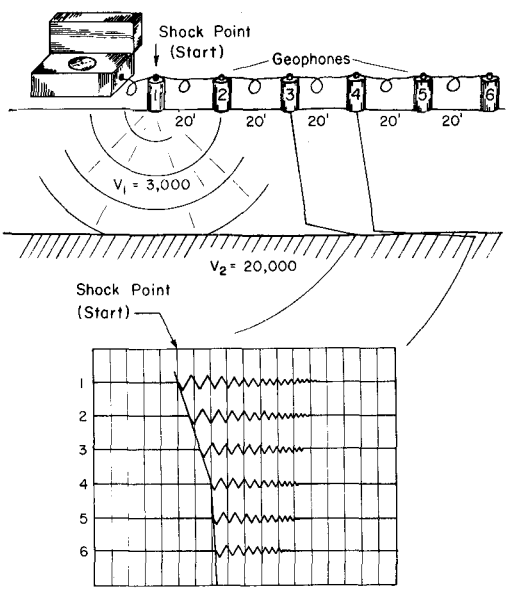

SEISMOGRAM

Time lines 0.01 sec. apart

PORTABLE REFRACTION
VISUAL TIMER

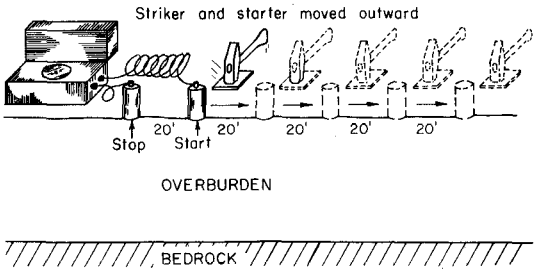

DISTANCE (FEET)	TIME (MILLISECONDS)
20	5, 6, 7, 6, 7, (7)
40	13, 12, 14, 13, (13)
60	19, 18, 19, (19)
80	20, 21, 20, (20)
100	21, 21, (21)
120	22, 23, 46, 22, (22)

TIME RECORD

Visual readings from timer

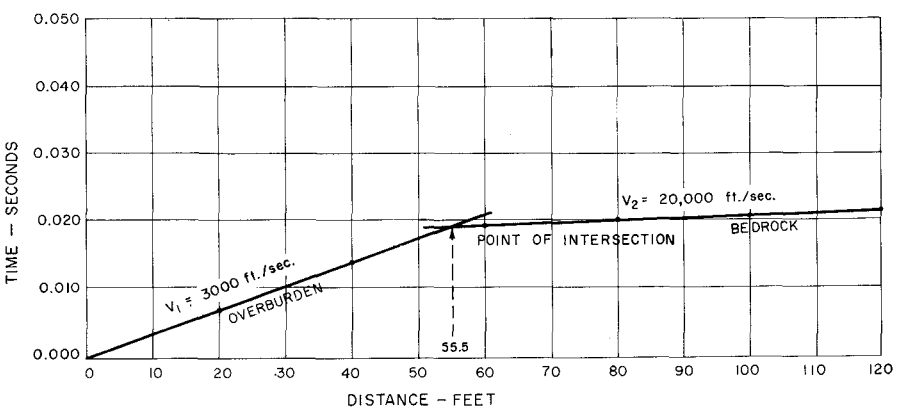

V = Shock wave velocity = $\frac{D}{T}$ = ft./sec.

D = Distance to point of intersection (feet).

T = Time to point of intersection (seconds).

H = Overburden thickness = $\frac{D}{2}\sqrt{\frac{V_2 - V_1}{V_2 + V_1}}$

V_1 = Overburden velocity

V_2 = Bedrock velocity

Figure 2-5. Seismic Refraction Methods

for the purpose of reversing the polarity of the current electrodes (Figure 2-6). This procedure permits the registering of several potential readings for comparison. By measuring the current and the potential drop between the two inner potential electrodes, the apparent resistivity of the soil to a depth approximately equal to the spacing interval of the electrodes can be computed. The resistivity unit may be designed so that the apparent resistivity is read directly on a potentiometer using the principle of a wheatstone bridge.

In sediments or loose rock the resistivity meter will show a marked drop in potential at the water table. However, in solid rock the greater resistance of the material will often mask the presence of the water table.

In "resistivity mapping" or "traverse profiling," the electrodes are moved from place to place without changing their spacing. The resistivity and any anomalies to a depth equal to the spacing of the electrodes can be determined for the various points.

In "resistivity sounding" or "depth profiling" the center point of the setup remains fixed while the spacing of the electrodes is changed. By plotting the apparent resistivity as a function of the electrode spacing, the subsurface conditions may be indicated. A break or change in curvature of the plotting will generally be noted when the electrode spacing equals the depth to a deposit with a resistivity differing from that of the overlying strata.

The electrical resistivity method and refraction seismographs have been used complementing each other with good results, particulary in delineating gravel lenses, bedrock and the groundwater table. However, salt water and saline soils have marked influence on conductivity. Excellent results have been obtained at swampy sites containing organic soils and saturated materials.

Field Penetration Test

This test provides a measure of the resistance of soil to penetration of the sampler. It also furnishes samples of the material penetrated for identification, classification, and other test purposes. This test is used to indicate relative in-place density of cohesionless and relative in-place consistency of cohesive foundation materials and for logging. Table 2-1 shows the relative density and consistence for various soils and blow counts.

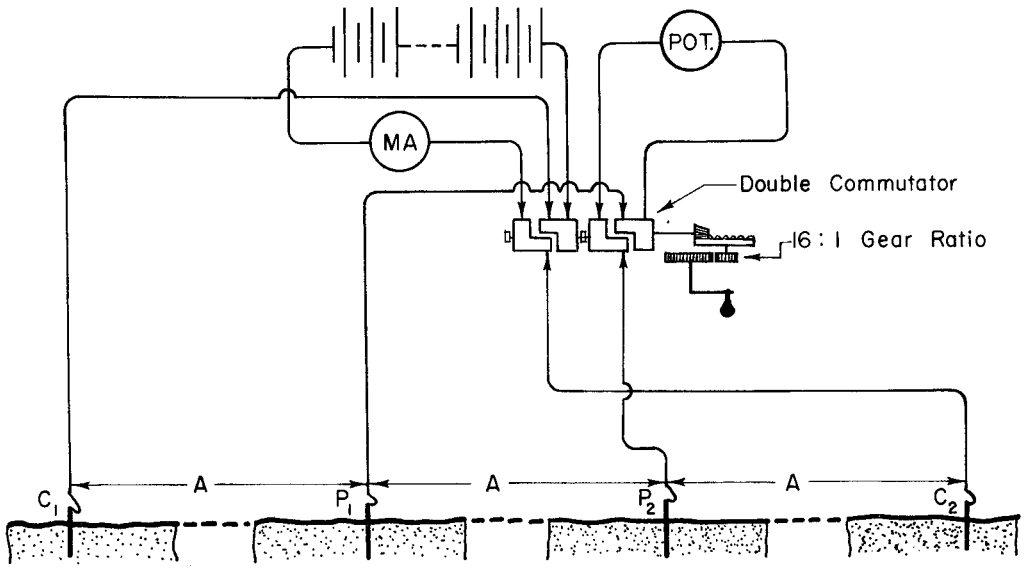

Legend

MA – Milliammeter
POT. – Potentiometer
C_1, C_2 – Current Electrodes
P_1, P_2 – Potential Electrodes
A – Uniform spacing between electrodes

Figure 2-6. Diagram of Resistivity Apparatus

Table 2-1. Standard Penetration Resistance

Noncohesive Soils		Cohesive Soils	
Blows per Foot	Relative Density	Blows per Foot	Consistency
Less than 4	Very loose	Less than 2	Very soft
4-10	Loose	2-4	Soft
10-30	Medium	4-8	Medium
30-50	Dense	8-15	Stiff
Over 50	Very dense	15-30	Very stiff
		Over 30	Hard

Application

The standard penetration test is recommended for use in SCS work. It is most applicable to fine grained soils that are at or near saturation and to fairly clean, coarse grained sands and gravels at variable moisture contents. Materials below the water table may generally be considered to be saturated.

Equipment

Drilling equipment - Any equipment may be used that will provide a reasonably clean hole to insure that the test is performed on undisturbed material and that will drive and reclaim the sampler in accordance with the procedure outlined below. Where necessary, casing or hollow stem auger will be used to prevent caving. The hole will be at least 2¼ inches in diameter.

A, B, or N rod may be used, however A or B is preferred. If N rod is used, the minimum hole diameter should be 2 3/4 inches.

Bottom discharge fishtail bits, jetting through open tube or sand or water bailers will not be used to advance holes.

Split-tube sampler - The sampler shall have an outside diameter of 2 inches. It shall consist of (1) a hardened steel driving shoe at least 3 inches in length with an inside diameter at the cutting head of 1 3/8 inches. It shall be sharpened by tapering the last 3/4 inch to a cutting edge not greater than 1/16 inch thick. Dented, distorted, or broken shoes shall not be used; (2) the split tube shall have a minimum length of 16 inches and an inside diameter of 1 3/8 <u>or</u> 1 1/2 inches; (3) the coupling head shall have a minimum length of 6 inches. It will have four vents each with a minimum diameter of 1/2 inch <u>or</u> it shall contain a ball check valve and no side vents. (Figure 2-7)

Hammer - The drive hammer shall weigh 140 pounds and have a 30-inch stroke (free fall). Any type of hammer may be used as long as there is no interference with its free fall and its energy is not reduced by friction on the drill rod, guides, or other parts of the equipment.

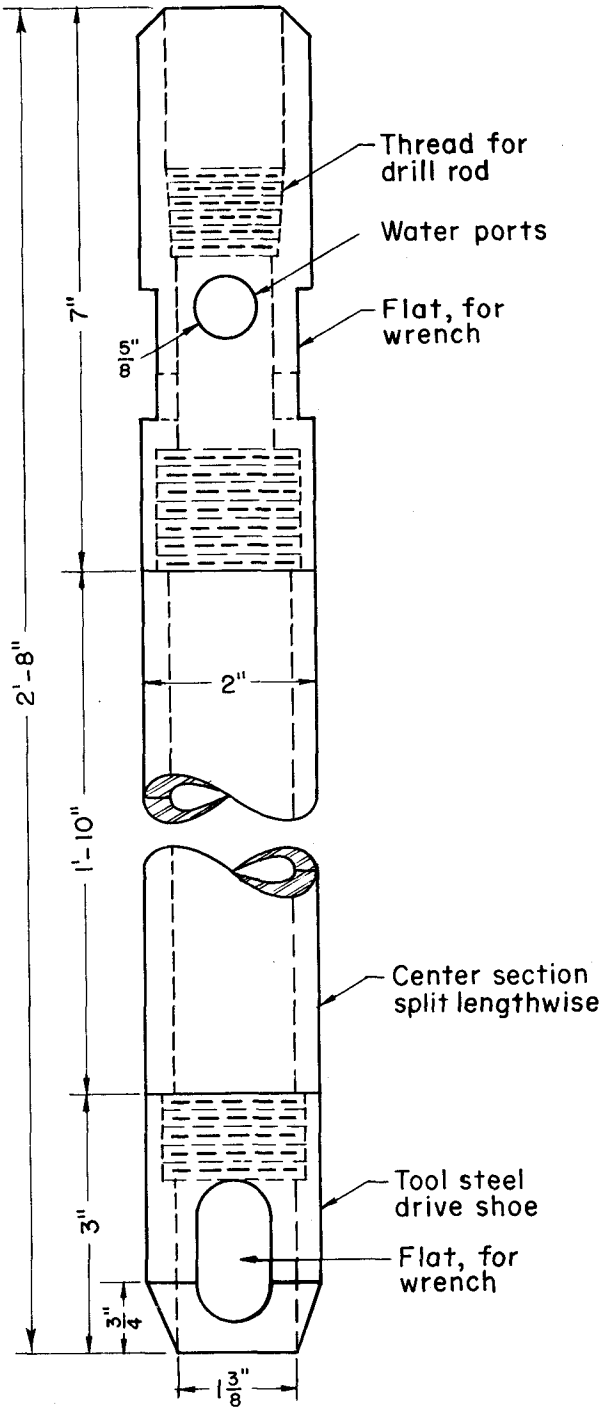

Figure 2-7. Split-Barrel Samples

Procedure

Cleaning hole - Clean the hole to the sampling elevation by use of equipment that will not disturb the material to be sampled. Do not use bottom discharge fishtail bits, jetting through an open tube, or sand water bailers. Take samples at each change in stratum and at intervals not greater than 5 feet. Never drive casing (or hollow stem auger) below the depth to which the hole is to be cleaned out.

The standard penetration test - Lower the split-tube sampler to the bottom of the cleaned hole. With the water level in the hole at the groundwater level or above, drive the sampler 6 inches with light blows so it will not be overdriven. Then drive the split-tube sampler 12 inches or to refusal, by dropping the 140-pound hammer 30 inches and record separately the number of blows required for each 6 inches of this 12-inch penetration test drive. Penetration of less than 1 foot in 100 blows is generally considered refusal. The blow count is the total number of blows required to drive this last 1 foot, or, with refusal, the number of inches penetrated by 100 blows.

The split-tube sampler is not to be used as a chopping bit. Where a boulder is encountered, it should be penetrated by other means (drilled or by chopping bit) or bypassed.

Remove the sampler from the hole and open it. Identify and classify the material or materials, record the percent recovery, place typical sample or samples in jars (without jamming or compressing), seal jars with wax and label. Label to show all data as to site location, location of hole and depth represented by sample, field classification, blow count, and percent recovery.

Vane Shear

The vane shear test provides a field method for determining the shearing resistance of a soil in place. See Figure 2-8. The vane, attached to the end of a rod, is forced into an undisturbed soil to be tested and rotated at a constant rate by means of a torque wrench or other calibrated torsion device attached to the rod. The moment or torque required to turn the vane is an indication of the shear strength of cohesive soils. Vane shear testing should be closely coordinated and carried out under the direction of the Unit Geologist.

Permeability Investigations

The coefficient of permeability is the rate of discharge of water under laminar flow condition through a unit cross-sectional area of a porous medium under a unit hydraulic gradient and standard temperature conditions. There are two temperatures which are used as standard. These are 60°F and 20°C. Two

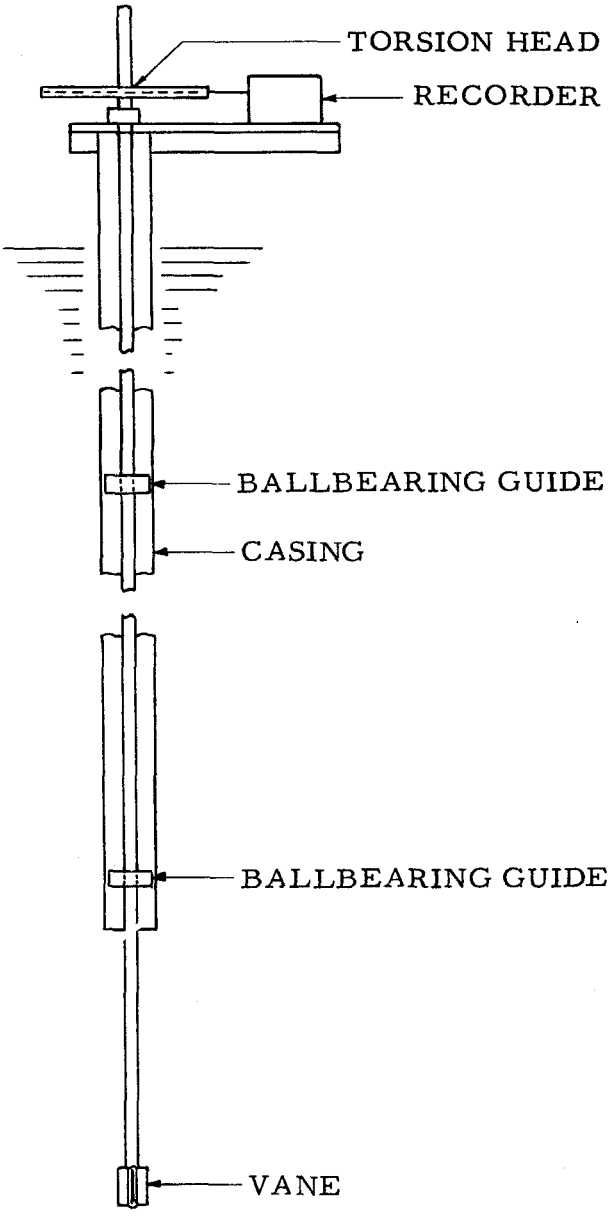

Figure 2-8. Idealized Vane Shear Apparatus

commonly used units for expressing the coefficient of permeability are: gallons per square foot per day under a hydraulic gradient of one foot per foot, and cubic feet per square foot per day under a hydraulic gradient of one foot per foot. This latter unit is commonly expressed as feet per day and treated as a velocity. This would be the discharge velocity under the conditions of unit head and standard temperature. Dividing this value by the porosity of the material will give the average velocity or dividing by the effective porosity of the material will give what Tolman[1/] terms the effective velocity or the actual velocity of the moving water.

Various field tests are used to determine water loss in rock formations. The test is carried out by means of sealing off portions of bore holes, introducing water under pressure, and measuring rate of water loss into the formation. Interpretation of results of pressure tests are illustrated in Figure 2-9. Pressure testing permits delineation of zones of leakage, for estimating grouting requirements or other treatment which may be needed to reduce water movement. Where pressure testing is required, bore holes should be tested in intervals of five feet or less.

Pressure-testing equipment - The apparatus commonly used for pressure testing foundations in rock consists of expansion plugs or packers set five feet apart, which may be expanded to seal off sections of a drill hole. See Figure 2-10. Water lines are so arranged that water may be admitted either below the bottom expansion joint or from a perforated pipe between the two expansion joints. The water lines are connected through a pressure relief valve, pressure gage, and water meter, to a pressure pump.

Water pumps having a minimum capacity of 50 gpm at discharge pressures of 100 psi are needed. Additional equipment includes accessory valves, gages, stopcocks, plugs, and tools necessary for maintaining uninterrupted tests.

Pressure-testing procedure - The following procedures apply in conduction a pressure test:

1. Lower the packer assembly in the bore hole to the predetermined depth of testing.

2. Expand the packers to seal off bore hole in section to be tested.

1/ Tolman, C. F., Ground Water, McGraw-Hill Book Co., Inc., New York and London, 1937, p. 216.

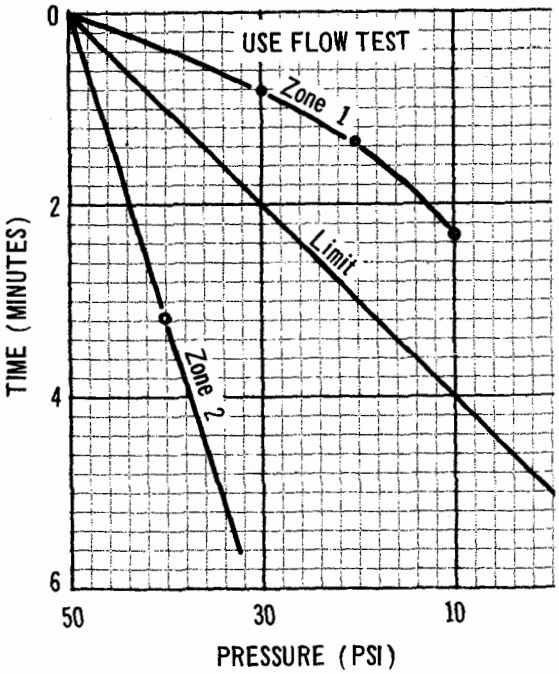

a. – Pressure holding test.

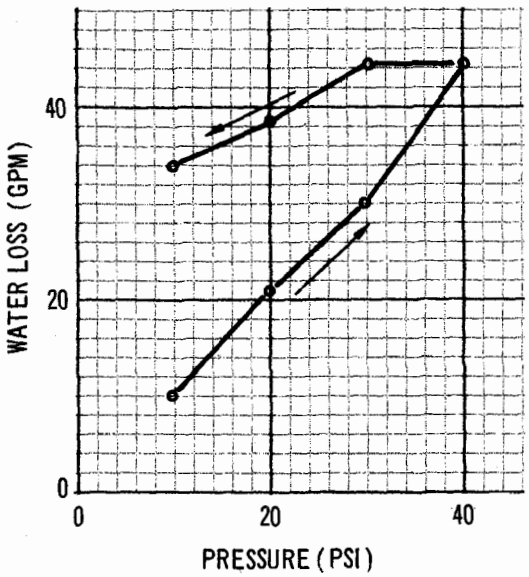

b. – Fissures opened by increased pressure (leakage problem).

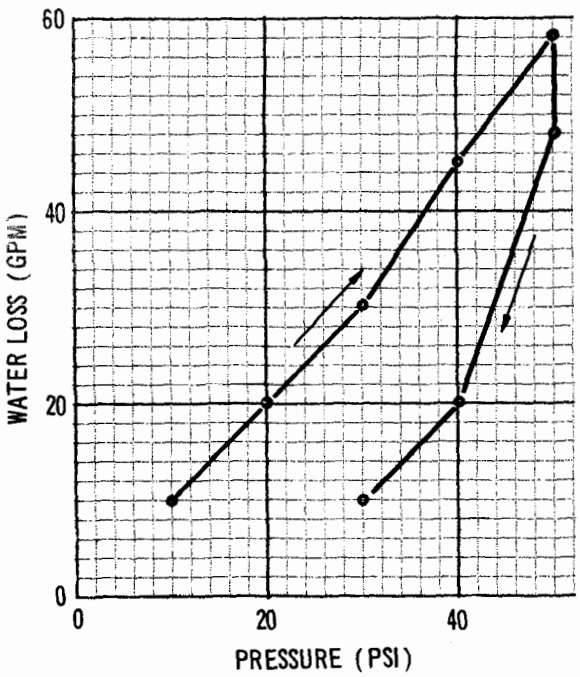

c. – Self–sealing formation (no leakage problem).

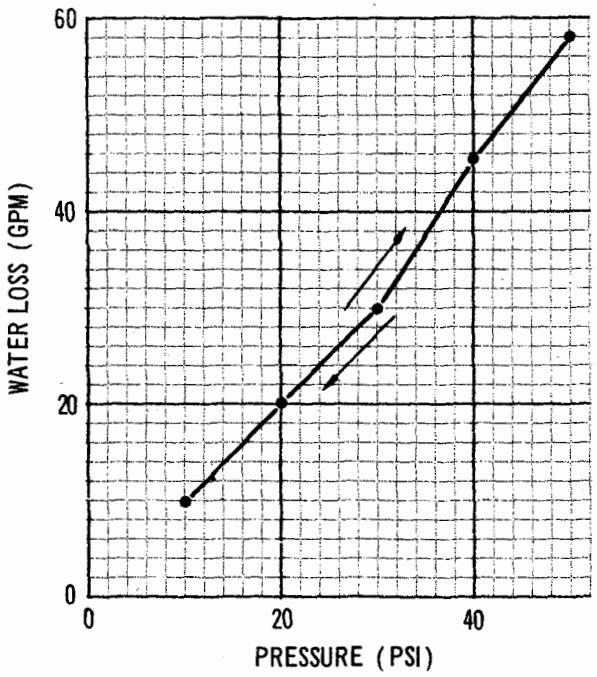

d. – Stable condition (leakage problem).

Figure 2-9 Sample Plots of Pressure-Test Data

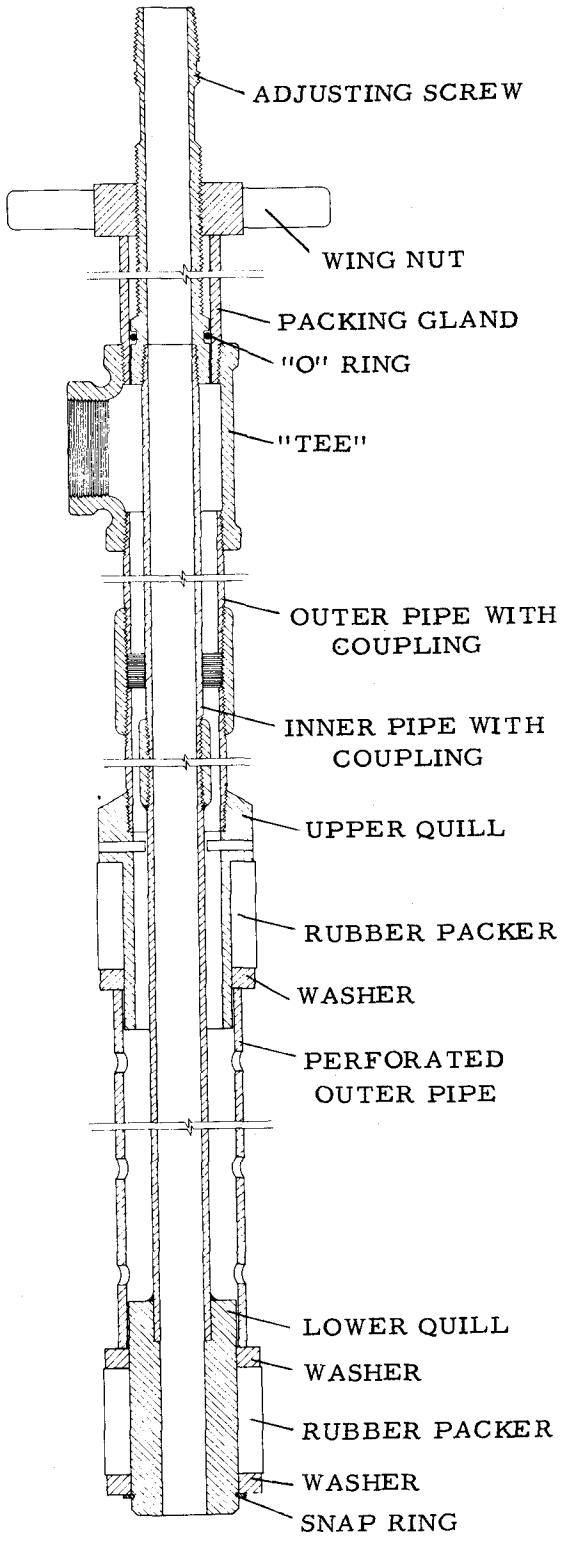

Figure 2-10. Pressure-testing Tool

3. Water under pressure is forced into the bore hole between packers by the pressure pump.

4. Adjust water pressure. Maximum water pressure at the upper packer for the holding test should not exceed one psi (pounds per square inch) per foot of hole depth.

5. When the initial test pressure is reached, close stopcocks and cut off pressure pump.

6. Record the pressure drop for various intervals of time to determine rate of drop.

7. If pressure drop exceeds 10 psi per minute, continue investigation with a flow test. A pressure drop of less than 10 psi per minute is evidence that no appreciable leakage occurs in the zone tested.

8. Where additional testing is indicated a packer type flow test may be used (see pumping-in tests below). In some types of material it may be desirable to determine rates of flow at several different pressures in ascending order from the lower to the higher pressure. The maximum pressure should not exceed 0.43 times the vertical distance in feet between the test elevation and the elevation of the emergency spillway. Then recheck these rates in descending order from the higher to the lower pressure. See Figure 2-9, b, c, and d.

9. Release water pressure between packers, contract expanders and move unit to next interval to be tested.

Pumping-in Tests

Each of the following tests applies to a certain set of conditions. If all of these conditions are not present, erroneous permeability coefficients will result.

Open-end tests - Open-end tests can be made in permeable formations either above or below the water table and with the use of gravity flow or pressure flow. The stratum being tested should have a thickness at least ten times the diameter of the test well. The test is based on the amount of water accepted at a given head by the formation through the bottom of a pipe or casing. Clear water must be used if valid results are to be obtained. It is also desirable that the temperature of the water being added be higher than the temperature of the groundwater to prevent the formation of air bubbles in the formation.

The casing should be sunk to the desired depth, leaving a foot or two protruding above ground. It is then carefully cleaned out just to the bottom of the casing. Drilling muds should not

be used in making holes. Cleaning should proceed, using clear water, until clear water is returned to the surface. A standard cleanout auger (figure 2-24) or other tool with jet deflector or low-pressure jet should be used to avoid disturbance of the material below the casing. Below the water table the hole should be kept full of water at all times during cleaning to avoid forcing of the materials up into the casing by water pressure from below. This makes it necessary to determine the normal water level in the hole before cleaning.

The test is then begun by adding clear water into the hole, maintaining a constant water level in the casing, until a steady rate of intake is established. If pressure is applied, water should be pumped until rate of inflow and pressure remain steady. Above the water table a constant level and intake rate are rarely attained and a slight surging of the water level or pressure at constant inflow may occur. When the oscillations become regular for a few minutes the test can proceed. An anti-surge device consisting of a capped, air-filled, stand pipe may be placed in the supply line near the pressure gage. This will dampen the surges and make gage readings easier to take.

The length of the test should be measured with a stop watch. Normally, ten minutes should be long enough. The volume of water should be measured with a water meter or other method accurate within 1 or 2 percent. The rate of flow (Q) is then computed by dividing the volume by time. Q is usually recorded as gallons per minute.

Above the water table, head (h) is measured from the bottom of the hole to the elevation of the maintained water level. Below the water table it is measured from the groundwater level to the maintained level. If pressure is applied, head is measured from the bottom of the hole or the normal water level to the elevation of the gage, plus the applied pressure. If the gage reads in pounds per square inch, the pressure reading is multiplied by 2.31 to convert it to feet of head (1 psi = 2.31 ft.).

The size of casing is usually measured in inches. For this test, the radius (r) is the inside radius of the bottom of the casing.

Figure 2-11 illustrates the conditions and procedures discussed above.

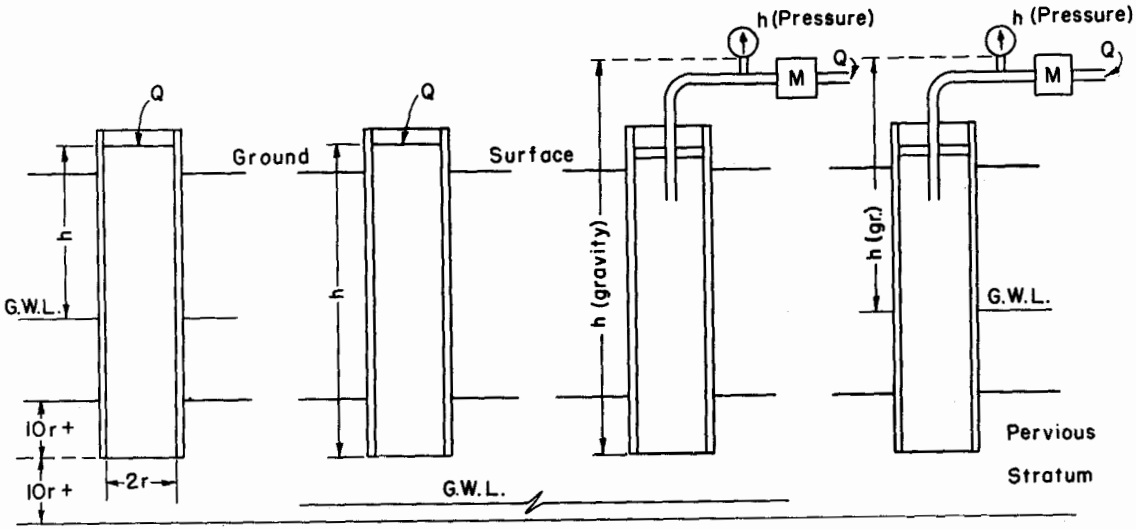

Figure 2-11 Open-end Permeability Test

Electric analog experiments conducted by the U.S.B.R. gave the following relationship between the above data and permeability:

$$k = \frac{Q}{5.5rh} \qquad (1)$$

where,

k = coefficient of permeability,

Q = constant rate of flow into the hole,

r = internal radius of the bottom of the casing,

h = differential head of water

Any consistent set of units can be used. As an example:

Data obtained in Field	Conversion to Consistent Set of Units
Q = 8.3 gallons per minute	= 1598 cubic feet per day
r = 1.5 inches	= 0.125 feet
h = 7.3 feet	= 7.3 feet

$$k = \frac{1598 \text{ ft}^3/\text{day}}{5.5 \text{ X } 0.125 \text{ ft X } 7.3 \text{ ft}} = 318 \text{ ft}^3/\text{ft}^2/\text{day}$$

For convenience, the formula can be written:

$$k = \frac{420Q}{rh} \qquad (2)$$

where,

k is in cubic feet per square foot per day,

Q is in gallons per minute,

r is in inches, and

h is in feet.

Using the same data as in the above example:

$$k = \frac{420 \text{ X } 8.3}{1.5 \text{ X } 7.3} = \frac{3486}{10.95} = 318 \text{ ft}^3/\text{ft}^2/\text{day}$$

It should be remembered that this test is an approximation and should not be considered to give a precise value for permeability. It has the advantage of being a simple test which can be performed during normal drilling operations. It gives a good indication of relative permeabilities at various depths. The test should not be performed with the bottom of the hole less than a distance of 10r from either the top or bottom of the strata being tested.

Packer tests

Packer tests are commonly used for flow testing of bedrock formations after pressure holding tests have indicated a need for permeability determinations. In bedrock they are usually conducted with the use of packers, in which case different sections of a completed hole can be tested by moving the packers. They can be conducted in unconsolidated materials between the bottom of the hole and the end of the casing or packer set in the bottom of the casing. In unconsolidated material, it must be certain that there is no space between the outside of the casing and the wall of the hole. If the hole is too large, water will escape upward outside the casing, giving erroneous results. Driving the casing a few inches beyond the bottom of the bored hole and cleaning it out will alleviate this.

If unconsolidated materials cave into the hole, the test can be performed in the following way: (1) Drive the casing to the bottom of the hole and clean it out. (2) Accurately measure the depth of the hole. (3) Pour a measured volume (V) of coarse sand or gravel into the casing, filling it to a depth slightly in excess of the length to be tested. The permeability of the added

gravel must exceed the permeability of the strata being tested by at least the ratio that the cylindrical and end area of the test section exceeds the end area of the casing.
Otherwise, grossly erroneous rates will result. This determination must be based on judgment, obviously, because the permeability of the formation is unknown. If the length of the test section is kept short, using 3/8 to 1/4 inch gravel will usually be adequate for testing unsorted sands and gravels. (4) Withdraw the casing to the top of the test section. Be careful not to pull the casing above the top of the gravel inside the hole. (5) Accurately measure the depth to the gravel pack. Subtracting this depth from the depth of the bottom of the hole is the factor L (see Figure 2-12), needed in computations. (6) Determine the mean radius (r) of the test section by the following formula:

$$r\ (\text{ft}) = \sqrt{\frac{V\ (\text{cu ft})}{\pi L\ (\text{ft})}} \qquad (3)$$

where,

r = radius of test section, (ft.),

V = volume of gravel added to hole, (cu. ft.),

L = length of test section, (ft.).

After completion of the test, if desirable, the hole can be deepened and a test run at a lower elevation.

In tests between two packers, used in rock where the hole will stand, it is usually desirable to complete the hole to final depth, clean it out, fill it with water, and start testing at the desired intervals from the bottom upward. In this way the entire hole can be tested without removing the apparatus from the hole.

In tests below the watertable, head (h) is measured in the same way as for the open-end test. That is, the vertical distance, in feet, from the watertable to the pressure gage, plus 2.31 times the gage pressure reading. Above the watertable it is measured from the mid-point of the test section to the pressure gage plus the applied pressure in feet of water. See Figure 2-12.

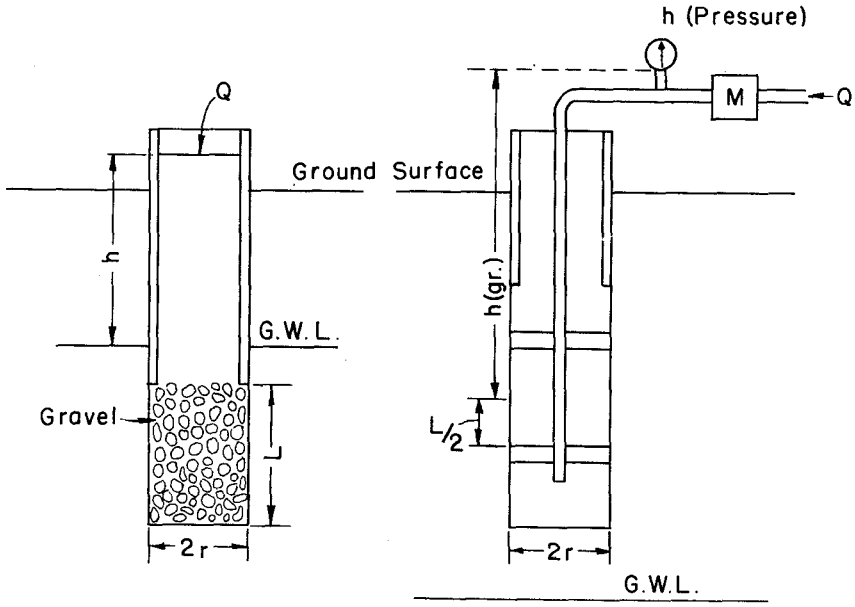

Figure 2-12 Packer-type Permeability Test

Where the length of the test section (L) is equal to or more than 5 times the diameter of the hole ($L \geqq 10r$), the formula used to compute permeability is:

$$k = \frac{Q}{2\pi Lh} \log_e \left(\frac{L}{r}\right) \qquad (4)$$

where,

k = permeability,

Q = constant rate of flow into the hole,

L = length of the test section,

h = differential head of water,

r = radius of test section

If the length of section being tested is less than five times the diameter, the relation is best described by changing the natural logarithm ($\log_e$) or $\frac{L}{r}$ in the above formula to the arc hyperbolic sine

($\sinh^{-1}$) of $\frac{L}{2r}$:

$$k = \frac{Q}{2\pi Lh} \sinh^{-1} \left(\frac{L}{2r}\right) \qquad (5)$$

Again, any consistent set of units can be used. If however, k is in cubic feet per square foot per day, Q in gallons per minute, and L, h, and r in feet, the formulas can be rewritten:

$$k = \frac{30.6Q}{Lh} \log_e \left(\frac{L}{r}\right) \tag{6}$$

$$k = \frac{30.6Q}{Lh} \sinh^{-1} \left(\frac{L}{2r}\right) \tag{7}$$

Table 2-2 below gives rounded values for the arc hyperbolic sines of numbers between 0.5 and 4.9. Table 2-3 gives rounded natural logarithms of numbers between 10 and 99. Other values can be obtained by interpolation.

Table 2-2 Arc Hyperbolic Sines of Numbers from 0.5 to 4.9

	.0	.1	.2	.3	.4	.5	.6	.7	.8	.9
0						.482	.569	.653	.733	.809
1	.88	.95	1.02	1.08	1.14	1.19	1.25	1.30	1.35	1.40
2	1.44	1.49	1.53	1.57	1.61	1.65	1.68	1.72	1.75	1.78
3	1.82	1.85	1.88	1.91	1.94	1.97	1.99	2.02	2.05	2.07
4	2.09	2.12	1.14	2.17	2.19	2.21	2.23	2.25	2.27	2.29

Table 2-3 Natural Logarithms of Numbers from 10 to 99

	+0	+1	+2	+3	+4	+5	+6	+7	+8	+9
10	2.30	2.39	2.48	2.56	2.64	2.71	2.77	2.83	2.88	2.94
20	2.99	3.04	3.08	3.13	3.17	3.21	3.26	3.29	3.33	3.36
30	3.39	3.43	3.46	3.49	3.52	3.55	3.58	3.61	3.64	3.66
40	3.69	3.71	3.74	3.76	3.78	3.80	3.83	3.85	3.87	3.89
50	3.91	3.93	3.95	3.97	3.99	4.00	4.02	4.04	4.06	4.07
60	4.09	4.10	4.12	4.14	4.16	4.17	4.19	4.20	4.22	4.23
70	4.25	4.26	4.27	4.29	4.30	4.31	4.33	4.34	4.35	4.37
80	4.38	4.39	4.40	4.42	4.43	4.44	4.45	4.46	4.47	4.49
90	4.50	4.51	4.52	4.53	4.54	4.55	4.56	4.57	4.58	4.59

Following is an example of the use of the above formulas and tables:

Given:

$r = 0.125$ ft

$L = 2.1$ ft $L > 10r$, use formula (6)

$h = h$ (gravity) + h (pressure)

h (gravity) = distance from ground water level or mid-point between packers to gage

= 3.7 feet

h (pressure) = 6 p.s.i. (gage reading)

= 13.9 feet (gage reading X 2.31)

= 3.7 + 13.9 = 17.6 feet

$Q = 3.6$ g.p.m.

$$k = \frac{30.6Q}{Lh} \log_e \left(\frac{L}{r}\right) \qquad (6)$$

$$L/r = \frac{2.1 \text{ ft}}{.125 \text{ ft}} = 16.8; \log_e 16.8 = 2.81 \text{ (from table 2-3)}$$

$$k = \frac{30.6 \text{ X } 3.6 \text{ X } 2.81}{2.1 \text{ X } 17.6} = 8.35 \text{ ft per day}$$

Well permeameter method - The open-end test and packer test described above are most practical in fairly permeable materials. That is, where the coefficient of permeability is one foot per day or greater. The well permeameter is best suited for low permeability materials. It is often useful in resevoir bottoms and canals to determine leakage potentials.

Since, in this test, the rate of inflow (Q) is usually very low, flow meters cannot be used and the volume of water used must be measured by some other method. An open-ended drum, calibrated in 1-gallon increments, is a convenient device. Also, since the test is of long duration and inflow rates are low, the water level must be maintained by use of a float valve. Any standard bob-float stock-watering valve with sufficient capacity to maintain the water level and with a counterbalanced operating arm can be used. The counter-balance allows the float to be suspended from the operating arm by means of a chain which can be lowered into the hole. The elevation of the water surface in

the hole is controlled by the length of the chain. Figure 2-13 is an illustration of the test apparatus as it should be set up.

The hole for this test can be made by any convenient method, taking care that all compacted soil is removed from the side of the hole and that the bottom of the hole is clean. The hole can be of any desired dimensions as long as it conforms to the general rule that its depth should be between 10 and 150 times the radius.

After the hole is completed and cleaned, it is backfilled with a measured volume of clean, uniform, coarse sand or gravel to a level about 6 inches below the water level to be maintained. The sand serves the purpose of supporting the hole during saturation and is a means of determining the mean radius of the hole. The radius is computed as described under the section on packer tests. A short piece of galvanized casing should be placed above the sand as protection for the float. This casing should be smaller than the hole to allow water to move freely outside the casing to the elevation of the water level in the well. It can be held in place by pouring pervious sand between the outside of the casing and the well.

The water used in the test should be from the same source as the water which will permeate the strata after construction, if possible. This is because in some soils and waters, a base exchange reaction takes place which might increase or decrease permeability. If this does occur, using water from a common source will assure any change will be in the right direction. The water must be completely free from sediment. Its temperature should be slightly higher than the temperature of the soil or ground water to prevent the formation of air bubbles. Because of the wide range of temperatures at shallow depths, the results of this test must be corrected to a standard temperature. This may be either 20° C or 60° F. Therefore, the temperature of the water in the hole must be taken. If the test is of long duration, the temperature should be taken several times and averaged to make the correction. Table 2-4 lists the factors by which the results of the test must be multiplied to make the temperature corrections (C_t). The factors are derived by dividing the viscosity of water at the given temperature by the viscosity of water at standard temperature (20° C and 60° F).

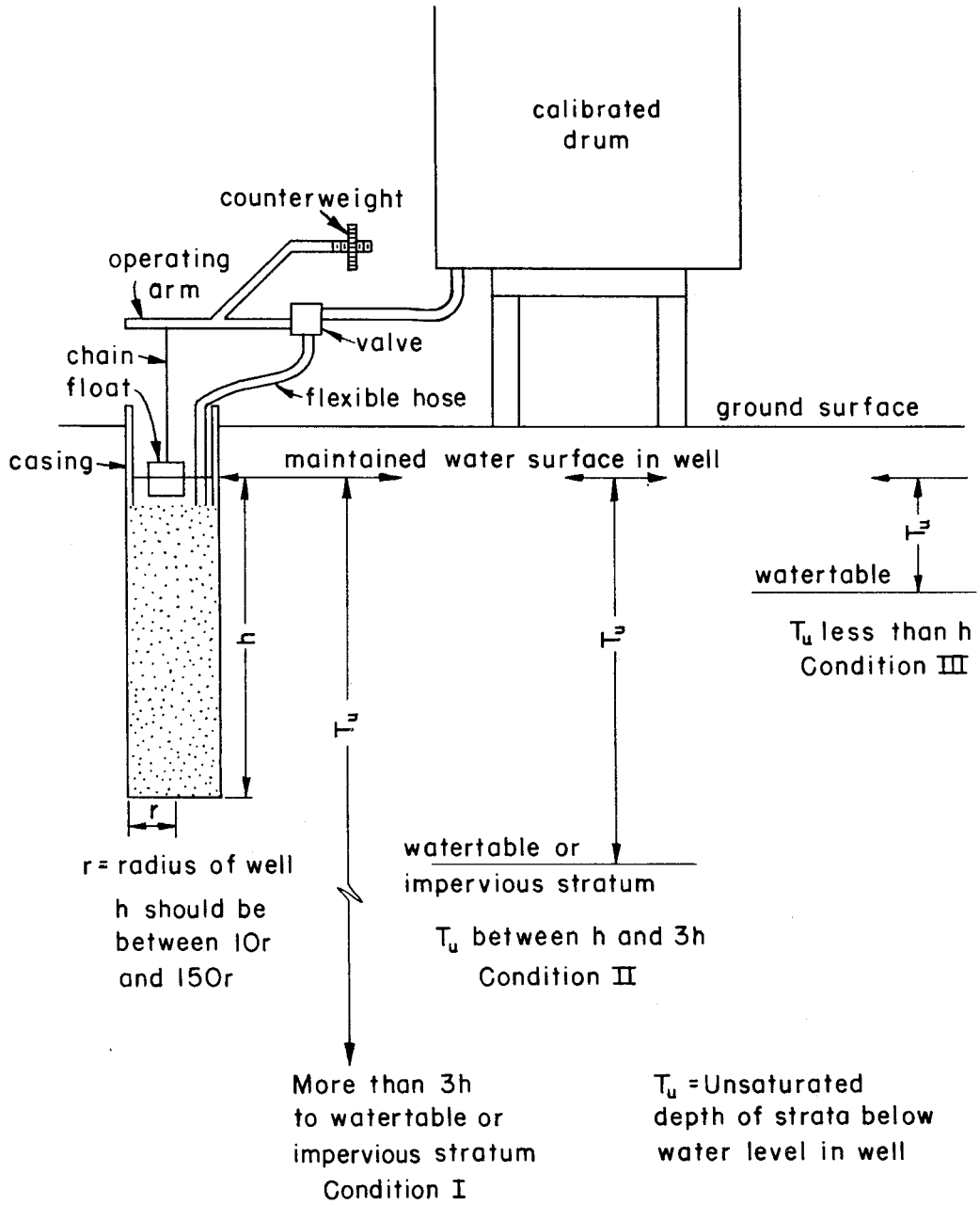

Figure 2-13 Well-permeameter Test

Table 2-4 Temperature Correction Factors

Water Temp. Degrees C	F	Correction Factor (C_t) to 20°C	60°F	Water Temp. Degrees C	F	Correction Factor (C_t) to 20°C	60°F	Water Temp. Degrees C	F	Correction Factor (C_t) to 20°C	60°F
10	50.0	1.30	1.17	17	62.6	1.08	0.97	24	75.2	0.91	0.82
11	51.8	1.27	1.14	18	64.4	1.05	0.94	25	77.0	0.89	0.80
12	53.6	1.24	1.11	19	66.2	1.02	0.92	26	78.8	0.87	0.78
13	55.4	1.20	1.08	20	68.0	1.00	0.90	27	80.6	0.85	0.76
14	57.2	1.17	1.05	21	69.8	0.98	0.86	28	82.4	0.83	0.75
15	59.0	1.13	1.02	22	71.6	0.95	0.85	29	84.2	0.81	0.73
16	60.8	1.10	0.99	23	73.4	0.93	0.84	30	86.0	0.80	0.71

The test should be run long enough to develop a saturated envelope in the soil around the well, but not long enough to build up the water table. In the more permeable materials the test should be run until a graph of time plotted against accumulative discharge for several hours is a straight line, indicating that a steady rate of discharge has been established. The straight portion of the curve should then be used for determining Q to compute permeability.

If a steady rate of discharge has not been established after approximately 8 hours, the minimum volume to be discharged can be determined from the following formula:

$$V_{min.} = 2.09\,Y_s \left[h \sqrt{\frac{2}{\sinh^{-1}\left(\frac{h}{r}\right) - 1}} \right]^3 \qquad (8)$$

where,

V_{min} = minimum volume to be discharged

Y_s = specific yield of soil being tested

h = height of water in well

r = radius of well.

The formula requires that the specific yield (Y_s) of the strata being tested be known. Specific yield is the amount of water which will drain from a soil by gravity flow. It is written as a decimal fraction of the saturated volume of the soil. For common soils, specific yields vary from 0.10 for fine grained soils to 0.35 for coarse grained soils. When the specific yield of the soil is not known, 0.35 should be used to give a conservative value for minimum volume. The test should be discontinued when the minimum volume has been discharged. Minimum volume can be determined from table 2-5, when h and r are known and specific yield is assumed to be 0.35. If the specific yield of the soil is known, the minimum volume determined from table 2-5, should be multiplied by the fraction $\frac{Y_s}{0.35}$ where Y_s is the known specific yield of the soil.

The field data needed to compute permeability are: (1) The rate of flow into the well in gallons per minute. (2) The mean radius of the well, in feet. (3) The height of the column of water in the well, measured from the bottom of the hole to the maintained water level, in feet. (4) The depth to the water table, if it is shallow, or the depth to an impervious layer or the water table (whichever is higher) if the water table is deep. (5) The temperature of the water in the well. The soil temperature should be determined also, to be sure that the water being used is warmer than the soil.

As illustrated in Figure 2-13, there are three different conditions which normally exist in the field. Each requires a slightly different formula for computing permeability.

Table 2-5 Minimum Volume, in Gallons, to be Discharged in Well Permeameter Where $Y_s = 0.35$

Radius of Well (r)		Height of Water in Well (h) Feet										
Inches	Feet	2	3	4	5	6	7	8	9	10	11	12
1.00	.083	25	70	145	265	410	620	900	1230	1620	2090	2660
1.25	.104	30	80	165	290	450	670	970	1310	1720	2220	2820
1.50	.125	35	85	180	310	480	720	1040	1390	1820	2350	2980
1.75	.146	35	95	195	335	510	770	1110	1470	1920	2480	3140
2.00	.167	40	100	210	355	550	820	1180	1550	2020	2600	3300
2.25	.187	40	110	220	380	580	870	1240	1630	2120	2720	3460
2.50	.208	--	115	235	400	610	910	1310	1710	2220	2840	3620
2.75	.229	--	125	250	420	640	960	1370	1780	2320	2960	3780
3.00	.250	--	130	260	440	670	1000	1430	1860	2410	3080	3940
3.25	.271	--	140	275	460	700	1050	1480	1930	2510	3200	
3.50	.292	--	145	290	480	730	1090	1540	2010	2610	3320	
3.75	.312	--	---	300	500	760	1130	1590	2080	2710	3440	
4.00	.333	--	---	315	520	790	1170	1640	2160	2800	3560	
4.25	.354	--	---	325	540	820	1210	1690	2230	2890	3680	
4.50	.375	--	---	340	560	850	1250	1740	2310	2980	3800	
4.75	.396	--	---	350	580	880	1290	1790	2380	3070		
5.00	.417	--	---		600	910	1330	1840	2450	3160		

Condition I exists when the distance from the water surface in the well to the water table or an impervious layer is greater than three times the height of water in the well. For this condition, equation (9) below, is used.

Condition II exists when the water table is below the bottom of the well, but the depth to the water table or an impervious layer is less than three times the height of water in the well. For this condition, equation (10) below, is used.

Condition III exists when the water table is above the bottom of the well. Equation (11) is used in this case.

Equation for condition I:

$$k = \frac{192\left[\sinh^{-1}\left(\frac{h}{r}\right)-1\right]\frac{Q}{2\pi}}{h^2}C_t \qquad (9)$$

Equation for condition II

$$k = \frac{192\log_e\left(\frac{h}{r}\right)\frac{Q}{2\pi}}{h^2\left(\frac{1}{6}+\frac{T_u}{3h}\right)}C_t \qquad (10)$$

Equation for condition III

$$k = \frac{192\log_e\left(\frac{h}{r}\right)\frac{Q}{2\pi}}{h^2\left(\frac{T_u}{h}-\frac{T_u^2}{2h^2}\right)}C_t \qquad (11)$$

where,

k = coefficient of permeability, cubic feet per square foot per day,

h = height of water in well, feet, measured from the bottom of well to maintain water level,

r = radius of well, feet,

Q = constant rate of flow into hole, gallons per minute,

T_u = unsaturated thickness between water level in the well and the water table or impervious layer,

C_t = correction to standard temperature.

Following are examples of each of the three conditions using the appropriate equation:

Condition I, where T_u is greater than 3h.

Given:

$h = 5$ feet

$r = 0.125$ feet

$Q = 0.10$ gallons per minute

$T_u = 30$ feet (greater than 3h; use equation 9)

T = temperature of water in well = 18° C

$$k = \frac{192\left[\sinh^{-1}\left(\frac{h}{r}\right)-1\right]\frac{Q}{2\pi}}{h^2}C_t \qquad (9)$$

$$\frac{h}{r} = \frac{5\text{ ft}}{0.125\text{ ft}} = 40;\ \sinh^{-1} 40 = 4.37$$

$$k = \frac{192 \text{ X } (4.37-1)}{25} \text{ X } 1.05 = 0.43 \text{ ft}^3/\text{ft}^2/\text{day}$$

The arc hyperbolic sines for $\frac{h}{r}$ from 10 to 200 can be obtained from table 2-6.

Table 2-6 Arc Hyperbolic Sines

	+0	+1	+2	+3	+4	+5	+6	+7	+8	+9
10	3.00	3.10	3.18	3.26	3.34	3.41	3.47	3.53	3.59	3.64
20	3.69	3.74	3.79	3.83	3.88	3.92	3.96	3.99	4.03	4.07
30	4.10	4.13	4.16	4.19	4.22	4.25	4.28	4.30	4.33	4.35
40	4.37	4.40	4.42	4.45	4.48	4.50	4.53	4.55	4.57	4.59
50	4.61	4.63	4.65	4.67	4.69	4.71	4.72	4.74	4.75	4.77
60	4.78	4.80	4.81	4.83	4.84	4.86	4.87	4.89	4.91	4.93
70	4.94	4.95	4.97	4.98	4.99	5.01	5.02	5.04	5.05	5.07
80	5.08	5.09	5.10	5.12	5.13	5.14	5.15	5.16	5.17	5.18
90	5.19	5.20	5.21	5.22	5.23	5.24	5.25	5.26	5.27	5.28
100	5.29									
200	5.99									

Example two:

Condition II, where T_u is greater than h but less than 3h.

Given:

h = 5 feet

r = 0.125 feet

Q = 0.10 gallons per minute

T_u = 6 feet (greater than h but less than 3h; use equation 10)

T = 18° C.

$$k = \frac{192 \log_e \left(\frac{h}{r}\right) \frac{Q}{2\pi}}{h^2 \left(\frac{1}{6} + \frac{T_u}{3h}\right)} C_t \qquad (10)$$

$\log_e 40 = 3.69$

$$k = \frac{192 \times 3.69 \times \frac{0.10}{6.28}}{25 \left(\frac{1}{6} + \frac{6}{15}\right)} \times 1.05 = 0.84 \text{ ft}^3/\text{ft}^2/\text{day}$$

The natural logarithms of h/r are obtained from table 2-3.

Example three:

Condition III, where T_u is less than h:

Given:

h = 5 feet

r = 0.125 feet

Q = 0.10 gallons per minute

T_u = 3 feet (less than h; use equation 11)

T = 18° C

$$k = \frac{192 \log_e \left(\frac{h}{r}\right) \frac{Q}{2\pi}}{h^2 \left(\frac{T_u}{h} - \frac{T_u^2}{2h^2}\right)} C_t \qquad (11)$$

$$= \frac{192 \times 3.69 \times \frac{0.10}{6.28}}{25\left(\frac{3}{5} - \frac{9}{50}\right)} \times 1.05 = 1.13 \text{ ft}^3/\text{ft}^2/\text{day}$$

Soil-sampling Tools

General

A wide variety of cutting and sampling tools are available on the market. Tables 2-7 and 2-8 may be used as a guide in selecting tools for drilling, logging, and sampling purposes in various soils. Only those logging and sampling tools recommended for SCS use are discussed in this Handbook.

Open-drive and Piston Samplers

Open-drive samplers are cylindrical samplers which are pushed or driven into the materials to be sampled. A drive sampler equipped with a piston is known as a piston sampler. A large number of drive and piston samplers are available on the market. They are manufactured in a variety of diameters, tube thicknesses and tube lengths. They are generally known as thick wall, thin wall, and split barrel samplers.

Thin-wall Open-drive Samplers

Thin-wall open samplers consist of solid thin-wall barrels. These are manufactured in a variety of lengths, diameters, and wall thicknesses. They must be equipped with ball or other types of check valves for satisfactory performance.

The simplest type of open drive sampler is the so-called thin-wall "Shelby Tube," Figure 2-14. It should be obtained in steel tubing lengths of 24 inches and from 3½ to 5 inches in diameter. The tube is attached to a head assembly by means of set screws. This head assembly contains a ball check valve. After the sample is obtained, the tube is detached from the head, sealed, and shipped to the laboratory where the sample is removed for conducting tests.

Thin-wall samplers do not have cutting shoes but rather a sharpened cutting edge. To provide clearance in certain materials, the edge may be swaged to cut a sample smaller than the inside diameter. Table 2-9 lists recommended bit clearance for different types of material.

Thin-wall drive-samplers provide good undisturbed samples of certain soil materials if proper methods of operation are used. The sampler must be advanced by a uniform and uninterrupted push without rotation. No additional drive should be made after the sampler stops. This requires that the drill rig be provided with a hydraulic pressure device capable of exerting a driving force of at least 8000 pounds. Since the drill rig serves as a reaction for driving the sampling tube, it may be necessary to anchor the rig to hold it down.

Sampler	Minimum Diameter1/ Required for:						Materials in Which Used
	Hole advancement	Logging	Consolidation Tests2/	Direct Shear	Triaxial Shear	Horizontal Permeability	
Continuous Helical Augers	3 O.D.						Medium soft to stiff cohesive soils free of cobbles and boulders. Unsaturated but wet sand and silt.
Iwan Hand Augers	2 O.D.	2 3/					
Closed Bucket Augers	3 O.D.	3 O.D. 3/					All, including gravel. Free of cobbles and boulders.
Slat-type Bucket Augers	3 O.D.	3 O.D. 3/					Cohesive soils.
Split-barrel		1-3/8 4/					All but hard and brittle soils free of coarse gravel, cobbles and boulders.
Dry-barrel	3 O.D.	3 O.D.					Cohesive soils.
Thin Wall		3	3	3	3-5 5/	5	Soft to stiff and loose to medium.
Stationary Piston-Thin Wall		3	3	3	3-5 5/	5	Same as above but includes very soft and very loose soils
Chopping-Jetting	2 O.D.						Stiff to hard clays, brittle soils, dense sand, partially cemented soils. All but very soft soils.
Double Tube Soil Core Barrel (Denison)	4 O.D.	2-15/16	2-15/16	2-15/16	3-5 5/	5	
Roller Bit	3 O.D.						Hard to soft rock.
Double-Tube Rock Core Barrel	2-15/16 O.D.	2-1/8	2-1/8	2-1/8	2-1/8	2-1/8	

1/ Applies to inside diameter unless indicated otherwise.
2/ Includes vertical permeability tests.
3/ Recommended only for use in homogeneous materials.
4/ Also standard penetration test.
5/ Three-inch samples are suitable when foundation materials are relatively homogeneous. Five-inch samples are required when stratification of the profile is significant.

Table 2-7 Recommended Logging and Sampling Tools, with Minimum Diameter

Table 2-8 Soil Types and Sampling Tools

Type of Soil	Logging or Disturbed Samples	Undisturbed Samples
Common cohesive and plastic soils.	Bucket-type augers,1/ all types of drive samplers, dry barrel.	Thin-wall open-drive sampler. Piston sampler. Double-tube core barrel
Slightly cohesive and brittle soils including silt, loose sand above the water table.	Same as above.	Thin-wall open-drive samplers. Piston samplers below water table. Double-tube soil core barrel (with liner).
Very soft and sticky soils.	Closed bucket auger,1/ dry barrel, piston sampler or open drive with core retainers.	Thin-wall or piston samplers.
Saturated silt and loose sand.	As above. Overdrive push-tubes to retain sample.	Piston sampler with heavy mud.
Compact or stiff and brittle soils including dense sands, partially dried soils.	Bucket-type auger.1/ Thick-wall drive sampler.	Double-tube soil core barrel.
Hard, highly compacted or partially cemented soils, no gravel or cobbles.	Bucket auger.1/ Thick wall drive sampler and hammer. Double-tube core barrel	Double-tube soil core barrel.
Coarse, gravelly and stony soils including compact and coarse till.	Bucket auger1/ 2/ Large diameter thick wall drive sampler.	Not practical. (Advance freezing and core.)
Organic clay, silt or sand.	As above according to basic soil type.	Thin-wall piston. Measure length of drive and original volume of sample carefully.

1/ Homogeneous soils only.

2/ Power equipment such as bulldozers and backhoes are more suitable in many cases.

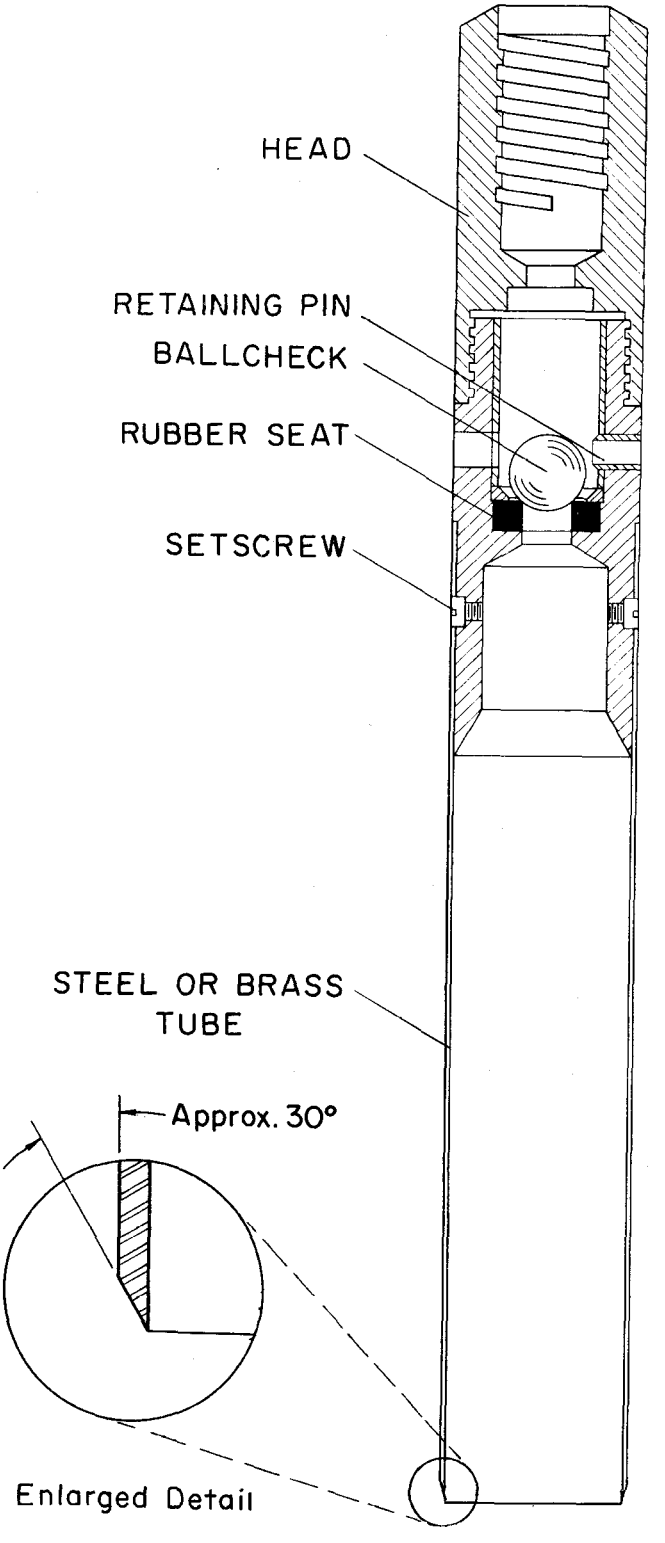

Figure 2-14 Thin-wall Open Drive Sampler

Thin-wall drive sampling methods are most practical in fine-grained, plastic, or peaty soils. The method is not suited for sampling brittle, cemented, or gravelly soils. The amount of disturbance in drive samples depends to a great extent on the dimensions of the sample tube. The thinner the wall and the larger the diameter, the less the disturbance will be.

Extruded samples are excellent for logging purposes. If desired for this purpose, the drill rig must be equipped with a sample ejector. The sample should be extruded through the top of the sampler.

Undisturbed samples for laboratory analysis should not be removed from the sampling tube in the field, but should be sealed in the tube and the tube sent to the laboratory. Either 3-inch or 5-inch diameter undisturbed samples should be taken depending upon the type of laboratory test desired.

Three-inch diameter tubes usually have a wall thickness of 1/16 inch and 5-inch diameter tubes about 1/8 inch. These tubes have no cutting shoe. Equipment is available to swage thin-wall tubes to provide desirable bit clearance. Bit clearance refers to the difference between the diameter of the cutting edge and the inside diameter of the sampling tube, in percent. For example, if the cutting edge is 2-15/16 inches and the I.D. of the sampling tube is three inches, then the bit clearance is 3 minus 2-15/16 divided by 3 (I.D.), or about 2 percent. Bit clearance may not be necessary if use of the sampler is limited to soft, loose, non-cohesive materials. Tubes with the proper bit clearance should be available at the site to obtain adequate undisturbed samples for each type of material encountered. Cohesive soils and soils which are slightly expansive require varying amounts of bit clearance. Saturated and soft, loose sands, silts and some clays may require little or no clearance. The clearance selected is that necessary to minimize drag or sidewall friction on the sample and to assist in retaining the sample in the tube.

Thin-wall sampling procedure.--The basic procedures for thin-wall tube sampling are as follows:

1. Advance hole to strata to be sampled.

2. Clean hole thoroughly to remove loose material from the bottom.

3. Be sure drilling rig is anchored or heavy enough to counteract the pressure it is capable of exerting. This should be at least 8000 pounds.

4. Sample tube must be smooth, thoroughly cleaned inside and outside, be properly sharpened, and have correct bit clearance for the type of soil being sampled. (See Table 2-9). Tubes should be plastic coated or greased to prevent rusting.

Table 2-9 General recommendations for thin-wall drive sampling

Soil type	Moisture condition	Soil consistency	Length of drive, inches	Bit clearance, percent	Open-drive sampler recovery	Recommendations for better recovery
Gravel	(Thin-wall drive samplers not suitable)					
Sand	Moist	Medium	18	0 to $\frac{1}{2}$	Fair to poor	
Sand	Moist	Loose	12	$\frac{1}{2}$	Poor	Recommend piston sampler.
Sand	Saturated	Medium	18	0	Poor	Recommend piston sampler.
Sand	Saturated	Loose	12 to 18	0	Poor	Recommend piston sampler.
Silt	Moist	Firm	18	$\frac{1}{2}$	Fair to good	
Silt	Moist	Soft	12 to 18	$\frac{1}{2}$	Fair	
Silt	Saturated	Firm	18	0	Fair to poor	Recommend piston sampler.
Silt	Saturated	Soft	12 to 18	0 to $\frac{1}{2}$	Poor	Recommend piston sampler.
Clay and shale	Dry to saturated	Hard	(Thin-wall drive sampler not suitable)			Recommend double-tube sampler.
Clay	Moist	Firm	18	$\frac{1}{2}$ to 1	Good	
Clay	Moist	Soft	12 to 18	1	Fair to good	
Clay	Saturated	Firm	18	0 to 1	Good	
Clay	Saturated	Soft	18	$\frac{1}{2}$ to 1	Fair to poor	Recommend piston sampler.
Clay	Wet to saturated	Expansive	18	$\frac{1}{2}$ to $1\frac{1}{2}$	Good	

Adapted from U.S.B.R. Earth Manual, 1960.

5. Attach tube to drill rod and lower into hole until it rests on the bottom.

6. Drive must be made without rotation and with one continuous stroke.

7. Length of drive must be carefully measured and should be a few inches short of the sampler length to prevent compaction of the sample in the tube by over driving. See Table 2-9.

8. Rotate sampler slightly to break off sample before pull is started.

9. Retrieve sampler from hole carefully and with a steady pull to avoid sample loss.

10. Length of sample recovered must be accurately measured and recorded.

11. Samples are sealed in tube for handling and shipping.

Piston-drive Samplers

Piston samplers are thin-wall samplers similar to "Shelby" thin-wall samplers but containing a piston to facilitate sampling. It is designed to obtain samples of soft or medium soils and for obtaining samples of sands, silts, and cohesive soils below the water table. See Tables 2-7 and 2-8. The stationary-piston sampler (Figure 2-15) is lowered to the bottom of the bore hole with the piston held in the lower end of the sampler. The piston is then locked into position by means of actuating rods which extend to the surface within the drill rods. The tube is then forced into the materials by steady pressure, while the piston remains stationary at constant elevation, to obtain the sample. The sampler is equipped with a vented head to permit escape of air above the piston. The piston creates a vacuum which holds the sample in the tube while it is being brought to the surface.

Stationary-piston samplers are available in sizes up to 30 inches in length with I.D. up to 4-3/8 inches. A modification of the above sampler (Osterberg type) requires lowering of the sampler in the bore hole and forcing the sampling tube into materials by means of hydraulic pressure applied through the drill rods. This type of sampler is available in 3-inch and 5-inch diameters. This type of sampler is recommended for those soils requiring a piston sampler.

Piston sampling procedure--The basic principles of operation for stationary-piston sampling are the same as for thin-wall sampling with the exception of techniques for locking the piston which vary with the type of sampler. Additional considerations are as follows: (1) The hydrostatic pressure of drilling fluids aids the suction effect of the piston. The consistency of the mud should be such

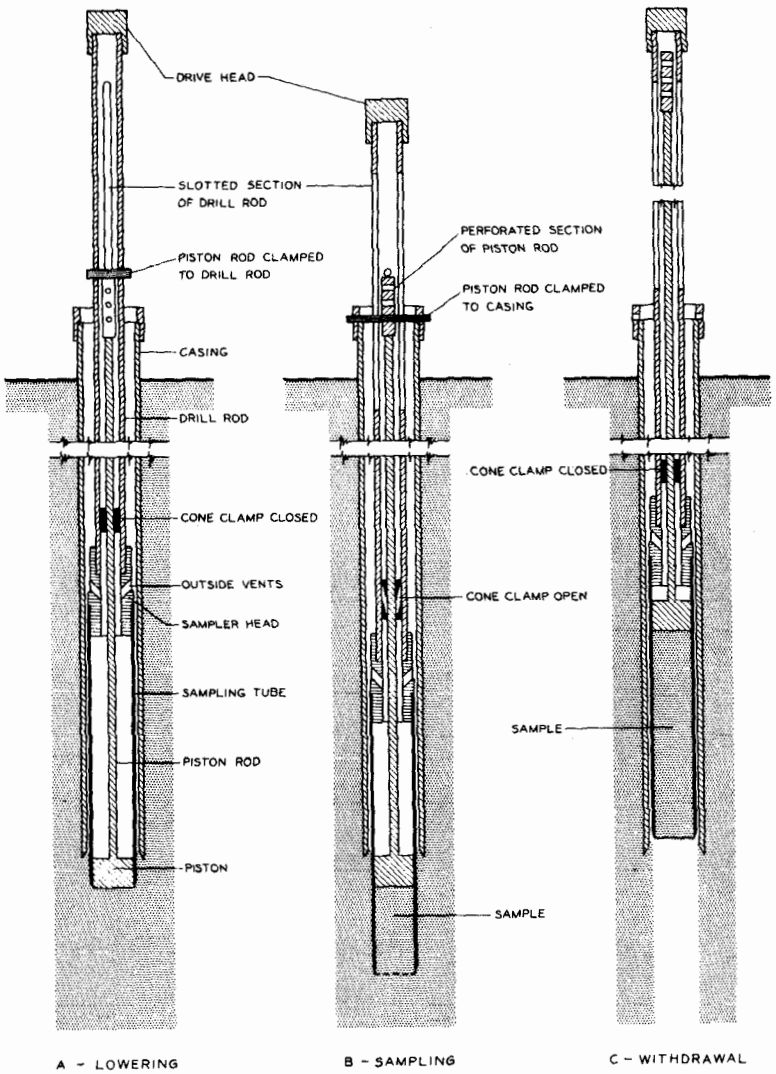

Figure 2-15 Stationary-Piston Sampler

that about ½ inch of the sample is saturated with mud; and, (2) tubes have little or no bit clearance and no sample retainers.

The basic procedures for sampling with the stationary piston sampler are as follows:

1. Advance and clean hole to sampling horizon as in open thin-wall drive sampling.

2. Attach sampler to drill rod.

3. Insert the piston and lock flush with the bottom of the tube.

4. Where a piston rod is used, it is connected to the piston either after the sampler has been lowered to the bottom of the hole or it may be connected piece by piece inside the drill rod while the sampler is being lowered.

5. The sampler is placed at the bottom of the bore hole and the piston unlocked by turning the piston rod clockwise five revolutions (this may vary with different samplers.)

6. The piston rod is then secured to the drill rig, casing, or preferably to an independent frame and the sampler injected under steady pressure into the material to be sampled. Weight of equipment is normally used as the reacting force.

7. Carefully measure length of drive.

8. At the end of the drive the piston rod is disconnected by continuing to turn it clockwise until the rod is fully released, then the sampler is raised. The piston is held in place at the top of its stroke by a split-cone clamp.

9. Before removing the sampler from the drilling fluid at the ground surface, the hand or a block should be placed over the end to prevent the sample from dropping out.

10. Remove sampling tube from drill rod and measure and record length of sample.

11. Seal sample in tube for shipment to the laboratory.

Split-barrel Sampler

The split-barrel sampler (Figure 2-7) consists of a head, barrel and cutting shoe. The barrel is split longitudinally so that it can be taken apart, after removal of the head and the shoe, and the sample removed for visual inspection or packing in jars or other containers for shipment to the laboratory. The split-tube sampler can withstand hard driving into soil materials. Since

cutting shoes often become damaged by driving, a supply of additional cutting shoes should always be available in the field.

Split-tube samplers may be obtained in lengths up to 24 inches. The 2-inch O.D. sampler is recommended for logging purposes and is required for the standard penetration test. It is not suitable for taking an undisturbed sample because of sample disturbance due to the thick cutting shoe and driving action of the hammer. Split-barrel samplers are adapted for accurate logging of thin-bedded materials.

Split-barrel sampling procedures--Sampling and standard penetration tests are normally run in conjunction with each other. Procedures for sampling and running standard penetration tests are as follows:

1. Advance and clean out hole to horizon to be logged.

2. Attach split-barrel sampler to drill rod and lower to bottom of hole. Sampler must be 2 inch O.D. and 1 3/8 inches I.D. of the cutting edge for standard penetration test.

3. Drive sampler 6 inches into strata and mark drill stem with chalk to provide for 1-foot drive.

4. With 140-pound drive hammer, falling 30 inches, drive sampler for distance of 12 inches. Count and record number of blows required for each 6 inches of this 12-inch test.

5. Rotate sampler slightly to break off before pull is started and retrieve sampler.

6. Remove sampler from rod and disassemble by removal of cutting shoe, head, and separating the two halves of the barrel.

7. Carefully log sample and record length.

8. Place samples needed for laboratory analyses in sealed jars to retain natural moisture.

9. Clean, inspect, and reassemble sampler for next drive. If cutting shoe has been damaged by the previous drive to the extent that the inside diameter is appreciably altered, it must be replaced with a proper cutting shoe.

Double-Tube Soil Core Barrel Sampler (Denison Type)

The most satisfactory sampler for obtaining nearly undisturbed soil samples of highly compacted, hard, stiff, uncemented or slightly cemented materials is the double-tube soil core barrel

with liner (Figure 2-16). Samples of cohesive soils are obtained with a double-tube soil core barrel with the least amount of disturbance. Double-tube samplers can be used to sample a wide variety of materials including some rock such as soft shales and soft and friable sandstones. The method is not satisfactory for obtaining undisturbed samples of soft, loose, cohesionless silts and sands below the water table, or very soft and plastic cohesive materials where the structure is destroyed by barrel whip. It is not suitable for obtaining undisturbed samples of gravels and cobbles.

The double-tube core barrel is advanced by rotating the outer barrel which cuts a circular groove and loosens the soil material to be displaced by the two barrels. Drilling fluid is forced downward through the drill stem between the barrels and carries the cuttings to the surface outside the tubes and drill stem. The inner barrel which does not rotate, moves downward over the undisturbed sample being cut by the rotating outer barrel. A liner is inserted in the inner barrel before the barrel is assembled. After drilling the required length, the sampler is withdrawn and the liner removed and prepared for shipping.

The outer cutting bit or the inner cutting shoe of double-tube soil core barrels are made in several lengths so that the relation of the cutting edge of the inner barrel to the bit can be varied. A retracted inner shoe or long outer bit is used for very hard soils which are not subject to erosion. In dense or brittle soils, a short bit is used so that the inner barrel is nearly flush with the cutting teeth. Soft, loose, or slightly cohesive soils require the shortest bit and the maximum protrusion of the inner barrel so that the drilling mud does not wash out, penetrate, or undercut the sample. The sample should enter the barrel so that it fills the liner but the outer barrel should cut the core so that a minimum of downward pressure is required. The number of teeth of cutting bits varies from 6 to 24, their height from 1/8 to two inches, and the outward projection from 1/16 to 1/2 inch. Systematic experimentation to determine the optimum number, shape, and dimension of the teeth for various types of soils is needed, and consideration may be given to teeth with the cutting edge or face at an angle with the radius, so that the teeth will tend to carry the cuttings toward the outer rim of the bit. Often blank bits are furnished by the manufacturer. These are cut, shaped, and built up with a hard alloy as desired.

Basket or spring-type core retainers may be used. Several types, using a different number and flexibility of springs, are available for use in different materials. The tapered, split-ring core retainer used in rock core barrels is not satisfactory for use in soil. A check valve is provided to relieve pressure over the core. The coring bits used usually have hard surfaced steel teeth.

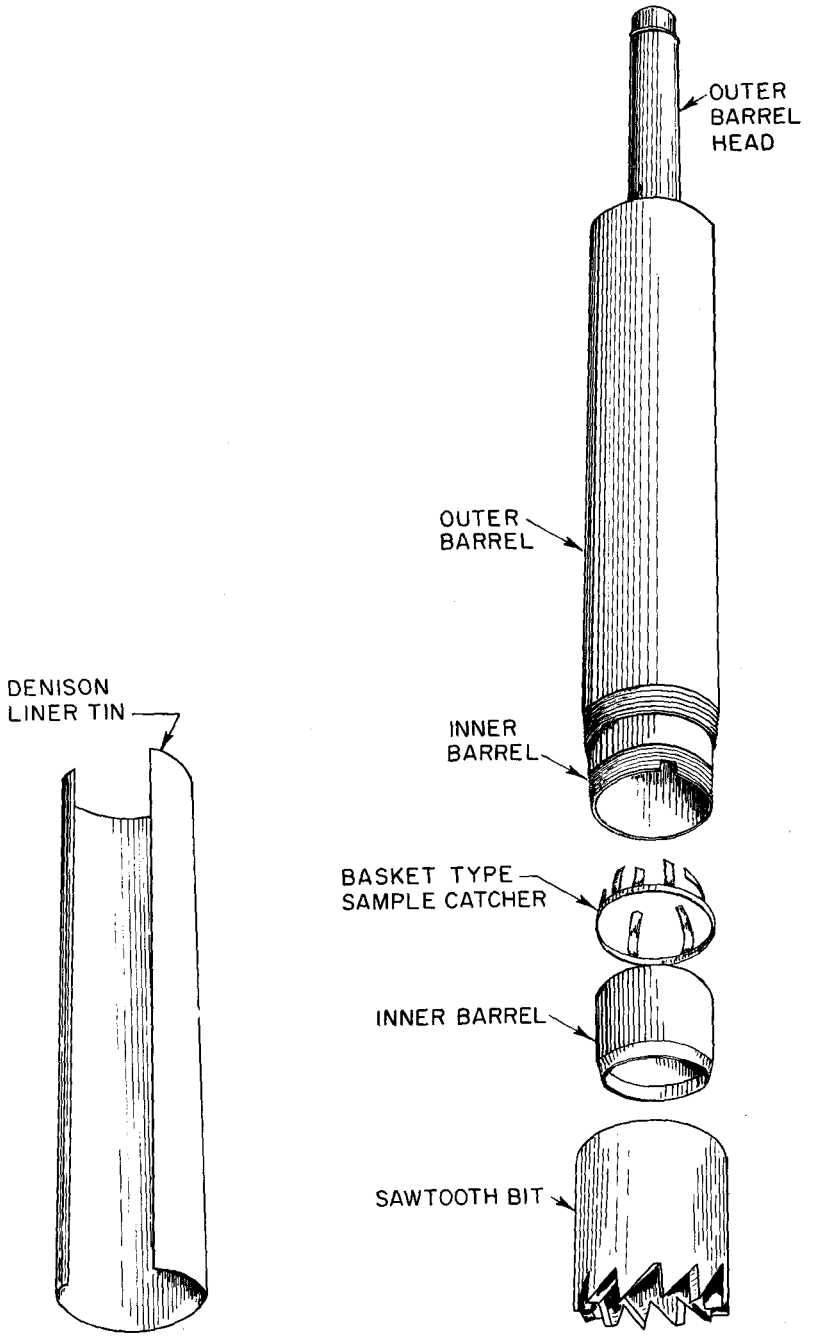

Figure 2-16 Double-tube Soil Core Barrel (Denison)

Double-tube soil core barrels with liners come in various sizes which obtain untrimmed soil samples ranging from 2-3/4 inches to 6 inches in diameter. The diameter of undisturbed core needed depends upon the kind of laboratory test required. Core barrels which obtain undisturbed samples of about two feet in length are recommended.

Sectional liners are recommended for use in denison-type core barrels when taking undisturbed samples for laboratory analysis. They should be made of stainless steel, preferably seamless, of cylindrical shape. Sectional liners, 8 inches long and 1/32 inch thick, are available from equipment manufacturers. A welded side joint is satisfactory if seamless construction is not available. Samples may be extruded at the laboratory from such liners with a minimum degree of disturbance and the liners returned to the field for reuse.

When sectional liners are used, three sections are taped together and placed in the barrel. The tape facilitates removing the sections from the barrel after sampling and also prevents water from entering between the sections and washing away the sample. The I.D. of the liners must be 1/8 inch smaller than the I.D. of the inner barrel on the sampler to be used, to allow clearance for the tape. A strong tape is needed to tape the sections together. GSA No. 8135-582-4772 is recommended. This type has longitudinally aligned filaments in the adhesive and has a tensile strength of 300 pounds per inch of width.

Two-foot, 20-gage galvanized metal liners may also be used to take samples for laboratory analysis. They should have welded and soldered seams. Split-tin liners or liners with loosely crimped seams are satisfactory for field logging purposes. The I.D. of the shoe on the inner should be machined or swaged down to 1/16 inch less than the I.D. of the liner, so that the sample will easily enter the liner.

Bit speed--Operational procedure in soil coring must be determined by trial for each soil condition. The rate of penetration, the speed of rotation, the length of cutting bit, the consistency of the drilling mud, and the pump pressure are all dependent upon soil conditions. The speed of rotation for soils and soft rock may vary from 40 to 125 rpm.

Bit pressure--The pressure on the coring bit and its rate of advance or feed must be carefully adjusted in accordance with the character of the material encountered, type of bit, and bit speed. Too high a bit pressure and rate of feed may damage the bit and cause plugging of the bit and fluid passages and failure of the sample before it enters the barrel. Too low a bit pressure and slow or intermittent feed may expose the core to excessive erosion and torsional stresses. As the sample enters the inner barrel, wall friction increases, and bit pressure must be increased

to maintain a constant rate of advance. Generally, the rate of penetration should be no greater than the speed at which the outer barrel is able to cut.

A technique which assists in recovering a double-tube sample in materials of low cohesion is to shut off the circulating pump about two inches before the end of the drive. With the circulation shut off, the coring operation is completed. The soil will be forced up between the inner and outer barrels. This causes the inner barrel to turn with the outer barrel and shears off the core. Consequently, there is no tendency for the sample to be pulled out of the barrel by material to which it is attached at the base when the sampler is removed from the hole. This procedure will also result in compaction in the inner barrel shoes and form a plug which will assist in sample recovery. The core catcher normally is not required when this technique is used.

Double-tube soil core barrel sampling procedures-- The basic rules of operation for double-tube soil core barrels are as follows:

1. Assemble barrel, attach to drill rod, and lower to bottom of hole.

2. Initiate drilling mud circulation and rotation of barrel. Both bit speed and rate of drilling mud circulation should be increased slowly to their optimum rates.

3. Length of drive must be carefully measured. Total drive length should be a few inches shorter than the sample container length to prevent overdrive.

4. Downward force should be a minimum and regulated to that speed at which the outer barrel is able to cut.

5. The rotation of the bit should be limited to a speed which will not tear or break the sample.

6. The consistency of the drilling mud should be thick enough to prevent caving of the hole.

7. Pump pressures should be the minimum required to carry the cuttings from the hole.

8. The sampler should be withdrawn from the hole carefully so as not to disturb the core during withdrawal.

9. Disassemble barrel and remove sample liner with sample.

10. Carefully remove all disturbed materials from both ends of the liner.

11. Seal ends for shipment to the laboratory.

Rock-sampling Tools

Double-Tube Rock Core Barrel Sampler

General--Rock core barrels are of two types, single tube and double tube. The single tube is designed primarily for boring in sound rock or for taking large cores in all types of rock. Double-tube rock core barrels are particularly useful for drilling small holes in sound rock, for drilling fissured rock, and for drilling soft rock where the core needs to be protected from the erosive action of drilling water. The fluid passes between the inner and outer barrels eliminating its erosive action. There are two types of double-tube core barrels, "rigid" and "swivel." In the rigid type the inner tube and outer tube rotate together while in the swivel-type double-tube core barrel, the inner tube does not rotate. The double-tube rock barrel (Figures 2-17, 2-18) differs from the soil-coring barrel in that it does not have a removable liner to hold the sample, and in the relationship of the cutting shoe to the inner shoe. The cutting shoe trims the core at slightly less than that of the inner barrel and the sample is retained in the inner barrel by means of a core catcher. The rock core barrel obtains a sample of rock in the shape of a cylindrical core. The circular bit cuts the core and the barrel slides down over it. A ball-check valve to relieve water pressure, and a core catcher assist in retaining the core in the barrel. Table 2-10 lists the various sizes of coring bits and barrels used in SCS work. A double-tube swivel-type core barrel in NX size is recommended for the types of rock boring generally required in SCS work. With some types of drilling rigs a short barrel, taking a one-foot core, is useful for starting a bore hole where rock outcrops at the surface and cores are desired from the surface down. (Figure 2-18)

Rock core barrels may have either the "retracted inner barrel" or the "bottom discharge bit." In the retracted inner barrel the drilling water passes down between the inner and outer barrels, across the cutting teeth of the metal bit or the waterways of the diamond bit and up outside the outer barrel. It is used in non-erodible rock. In the bottom discharge bit the drilling fluid passes out through holes in the bottom of the bit proper, and thence up outside the outer barrel. It is used mainly in soft or broken rock.

Rock core bits--In general, a small number of relatively long teeth are preferable for coring soft rock formations such as those containing clay streaks or shale layers. On the other hand, a large number of small teeth provides a greater rate of progress and causes less disturbance of the material when coring in medium-hard formations.

Steel saw-tooth coring bits are usually provided with teeth or inserts made of very hard and abrasion-resistant tungsten carbide alloys which are sold under various trade names. Blank bits are also available for customers who desire to set their

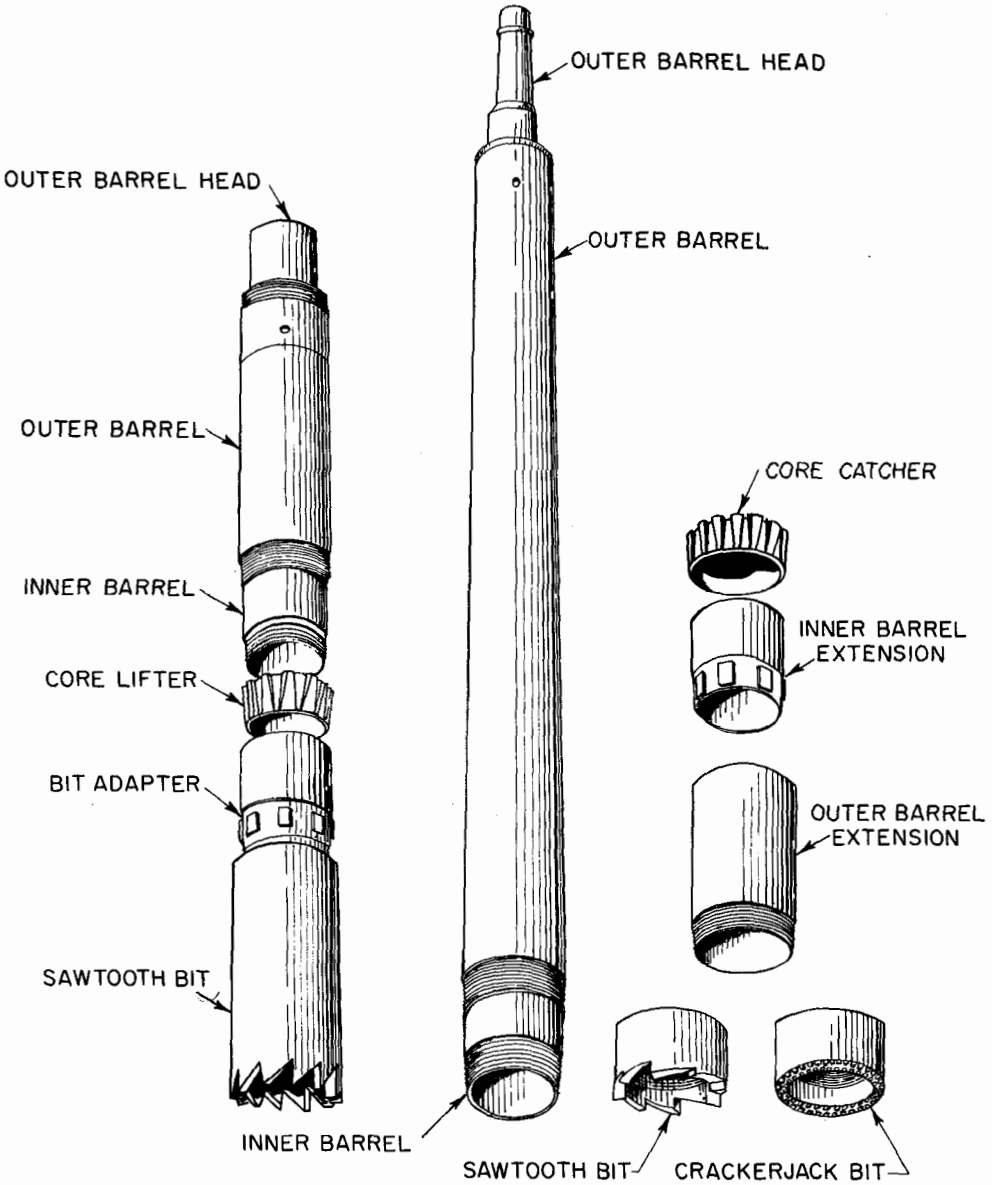

Figure 2-17 Long and Short Rock Core Barrel

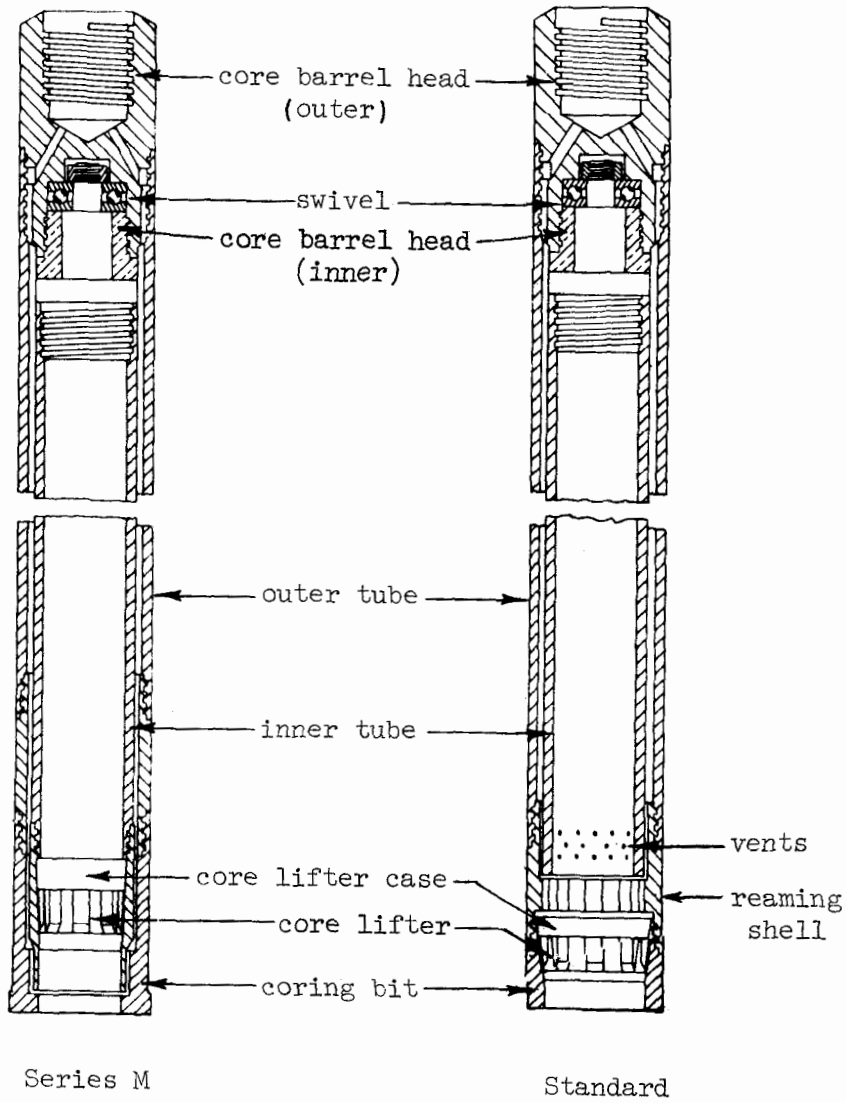

Figure 2-18 Swivel-type Double-tube Rock Core Barrels.

Table 2-10 Standard Sizes of Coring Bits and Barrels, Casing and Drill Rod.

ROCK AND SOIL CORING BITS AND BARRELS

Size Inches	Hole Inches	Core Inches
AX or AWX	1-7/8	1-1/8
BX or BWX	2-3/8	1-5/8
NX or NWX	2-15/16	2-1/8

FLUSH COUPLED CASING AND COUPLING

CASING				COUPLING			
Size	O.D. Inches	I.D. Inches	Wgt. lbs. per ft.	Size	O.D. Inches	I.D. Inches	Wgt.
AX	2-1/4	2	2.9	AX	2-1/4	1-29/32	1.8
BX	2-7/8	2-15/32	5.7	BX	2-7/8	2-3/8	3.2
NX	3-1/2	3-1/16	7.8	NX	3-1/2	3	4.0

DRILL ROD				DRILL ROD COUPLING			
Size	O.D. Inches	I.D. Inches	Wgt. lbs. per ft.	Size	O.D. Inches	I.D. Inches	Wgt.
A	1-5/8	1-1/8	3.7	A	1-5/8	9/16	1.7
AW	1-3/4	1-7/16	4.2	AW	1-3/4	5/8	2.2
B	1-7/8	1-1/4	5.0	B	1-7/8	5/8	2.4
BW	2-1/8	1-13/16	5.3	BW	2-1/8	3/4	3.1
N	2-3/8	1-5/8	5.2	N	2-3/8	1	4.0
NW	2-5/8	2-5/16	5.5	NW	2-5/8	1-3/8	5.5

(From The Diamond Core Drill Manufacturers Association)

own bits. Steel bits are much less expensive than diamond bits, but are recommended for use only in soft or moderately soft rock. The rate of progress in hard rock is slow with steel bits and the bits wear rapidly.

Diamond bits are used for coring all but the soft and moderately soft rock. They are of two kinds - set and impregnated. In set bits, industrial diamonds, usually West African Bortz, are set by hand or machine in a tungsten carbide matrix metal. Reaming shells serve to stabilize the bit and prevent it from whipping from side to side. Diamond bits and reaming shells may be used interchangeably with steel bits on the double-tube rock core barrels. When set diamond bits and reaming shells become worn, they are returned to the manufacturer for resetting. The remaining stones are salvaged in this process.

Normally it is advantageous to have at least three types of diamond (set) bits available: One for very hard formations (chert or quartzite), one for hard formations (sandstone or dolomite), and one for medium hard formations (cemented shale). Bits for harder formations use smaller stones, greater total weight of stones, and less water courses. Using each bit only in the formations for which it is designed results in much longer life for the bits. Typical diamond bits and reaming shells are shown in Figure 2-19.

In impregnated bits the entire cutting edge of the bit is impregnated with small industrial diamond fragments. They are especially recommended for very hard, broken formations, which might result in "shelling" of diamonds from a set bit. Sand-blasting is sometimes required to expose new cutting points on these bits. They cannot be reset and have no salvage value. They are used until completely worn out and then discarded.

Boring in loose, unconsolidated materials will seriously damage diamond bits. Where unconsolidated materials must be penetrated to reach rock, casing should be used and the hole thoroughly cleaned before boring with a diamond bit. Flush-coupled casing is usually used for this purpose.

A split-ring core catcher is usually employed to seize the core when the barrel is lifted; after the core is broken off the catcher holds it in the barrel.

The inner barrel may or may not have vents to permit escape of the water displaced by the core. Omission of the vents theoretically reduces friction because water in the inner barrel above the core must be forced out between the core and the barrel, lubricating it. On the other hand, the escaping fluid may cause erosion of soft rock cores if the vents are omitted.

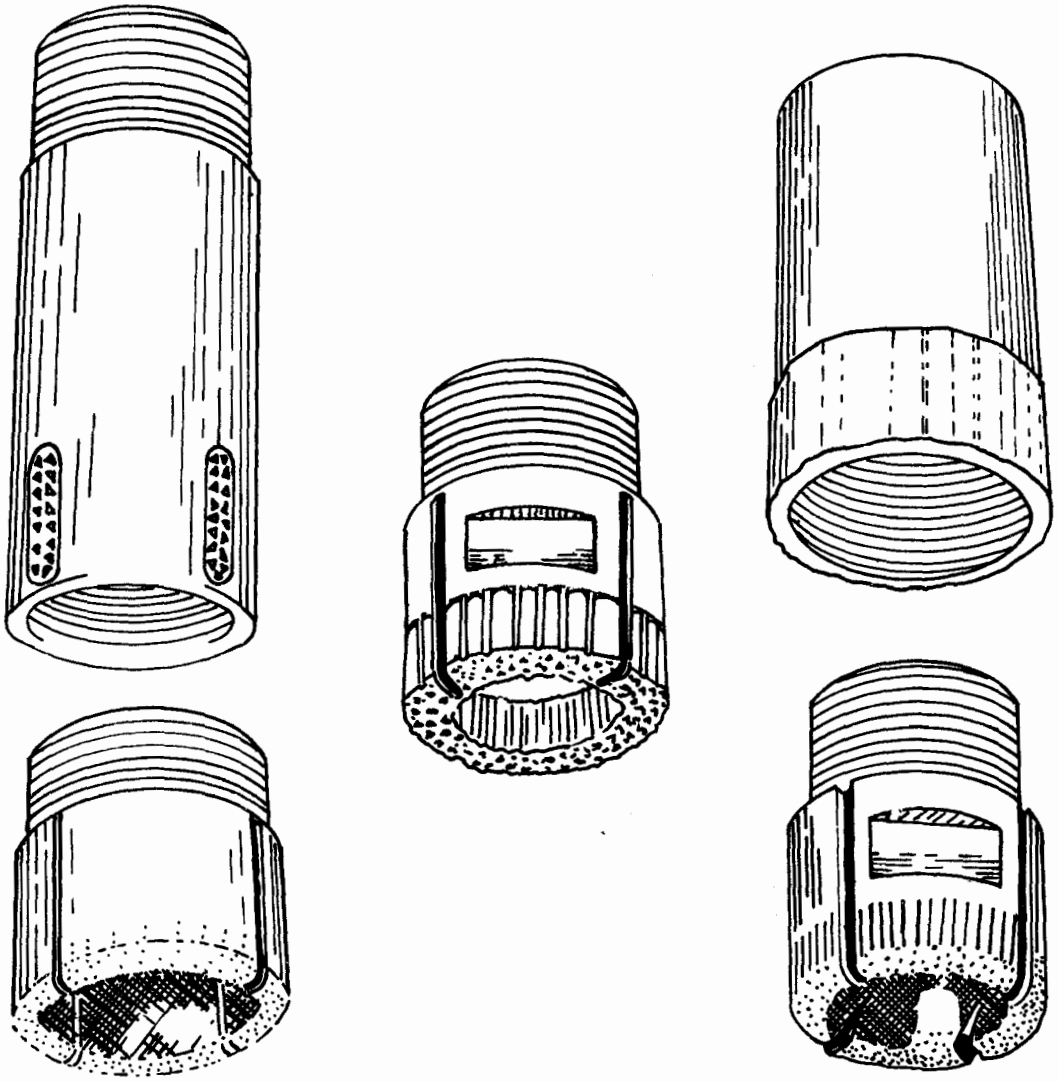

Figure 2-19 Diamond Bits and Reaming Shells

Rock core bit speed--Excessive bit speed will result in chattering and rapid wear of the bit and will break the core. A low bit speed results in a slow rate of progress and higher wear on diamonds. As the equipment becomes worn and the drill rods poorly aligned, it may be necessary to decrease the bit speed in order to avoid excessive vibration, whip, and chattering of the bit with consequent danger of breaking the core and damagine the bit. Higher speeds should be used in hard rock and lower in soft or broken rock. Diamond bit drilling speeds vary from 300 to 1500 rpm, while those for metal bits vary from 100 to 500 rpm.

Rock core bit pressure--The rate at which the coring bit is advanced depends upon the amount of bit pressure used. This pressure must be carefully adjusted to the character of the rock, the type of bit, and the bit speed. Excessive bit pressures, expecially in soft rock, will cause the bit to plug and may possibly shear the core from its base. The bit pressure is controlled by a hydraulic feed on the drilling machine. For shallow drilling, the weight of the drilling column will never exceed the optimum bit pressure except in very soft rock.

In hard rock a high feed pressure on diamond bits not only increases the rate of advance but also keeps the bit sharp and free cutting. A low feed pressure in the same rock tends to polish the diamonds. In softer rock the best results may be obtained with relatively low feed pressures.

Drilling fluids--Clear water is generally preferred to drilling mud in rock coring. Water requires smaller fluid passages and pump pressures, and the rock cuttings are generally fine and easily carried to the surface. In some cases air circulation is used with coring.

Where water is used, the flow of the return water should be regulated so that the cuttings are just carried out of the hole. If too much is used, the velocity across the bit face is increased which results in bit erosion. The metal holding the diamonds in a bit may be scoured away, leaving the diamonds exposed and easily pulled out. The flow should be increased when softer rock is being cored and larger sized cuttings are formed. However, it must not be great enough to wash away the core.

If water pressure begins to build up, there is generally some restriction at the bit face or in the core barrel. "Plugging" may occur where the rock is fractured or contains many seams. In this event a piece of rock wedges in the bottom of the core barrel, but also restricts water flow. The barrel may sometimes be cleared by lifting off the bottom a few inches and letting the hole wash. Sometimes it is best, if plugging is a problem, to drill through seams of broken rock with a roller bit. This method has the disadvantage, however, that no core is obtained.

If a diamond bit is run without sufficient cooling water (or air circulation), it will rapidly burn and stick fast and may be ruined.

A serious condition frequently encountered is the loss or "running off" of return water into cavities in the rock, causing what is known as a "blind hole." This condition can often be corrected by adding leaves, grass, or cotton hulls to the water. Such materials will often seal seams and cavities in the sides of the hole.

Hole cleaning--The hole should always be washed before starting to drill, as well as before pulling out the rods and tools. It should be kept in mind that at the end of a run there is a column of water extending the full length of the hole carrying the cuttings in suspension. If the pump is stopped immediately, these cuttings will settle to the bottom and when the bit is lowered it will rest upon a thick layer of mud instead of clean rock. The pump should be kept running until the return water is clear. When drilling through soft rock where there is a chance of washing the core away, the core barrel should be raised at least six inches before washing.

Core recovery--Percentage core recovery is an important factor in rock coring operations. The rock below the core barrel and in the lower part of the core is subject to torsion and vertical forces. The core is cut to a slightly smaller diameter than the inside diameter of the core barrel inner tube and, excepting cores of certain soft and swelling rocks, there is very little inside wall friction as long as the core is unbroken. However, inside friction develops when the core is broken and rock fragments become wedged between the core and inner barrel. A greater part of the feed pressure may then be transmitted to the core and to the rock directly below the core. The result is that weak sections of the rock, and possible all of it, is broken up and removed by the circulating water instead of entering the core barrel.

Since the torsional moment of resistance of the core increases with the cube of its diameter, an increase in diameter is very effective in reducing breakage and increasing the recovery ratio and the length of core obtainable. Normally the "NX" barrel (2-1/8-inch diameter core) is the smallest core barrel which should be used, mainly because of core recovery problems.

Other factors may also influence core recovery. Faulty core catchers may cause the loss of much core. Excessive water use may wash soft materials away. Warped drill rods or worn guides may result in undersize or broken and ground up core. The proper selection of bits, although primarily influencing the rate of drilling, has some application to core recovery, particularly in soft formations. For example, a steel bit is usually more effective in shale than a diamond bit, both in rate of

drilling and amount of recovery. Diamond bits generally have better recovery ratios than steel bits in harder rock.

Obviously, no core can be recovered when openings such as caverns, solution channels, or large open joints are encountered. The presence of such cavities can often be recognized by the drilling tools dropping several inches, suddenly, accompanied by a loss of water circulation.

In removing the core from the barrel it may be necessary to tap the barrel lightly with a hammer. The core should be laid out exactly as it comes out of the barrel, and allowances made for seams or fissures run through. The core barrel should be thoroughly washed and the joints lubricated before reassembling.

General considerations for rock coring--The following general considerations should be observed in rock coring work:

1. Always lower rods and tools carefully. Dropping an expensive diamond bit on the bottom of the hole can cause serious damage.

2. Don't let the drill bit bounce or vibrate on the formation.

3. Don't start the bit while it is resting on rock. Spin it into the formation slowly and cautiously at first. Increase the feed after penetrating four to six feet. The top rock is usually weathered, fractured, and seamy. Remember the old axiom among drillers that "more damage is done to the bit in the first five feet than in the next hundred." Also, the "solid rock" being drilled could be a boulder or projecting ledge, after which the bit could be ruined running through gravel and cobbles.

4. Don't slide a diamond bit over old core - spin over it. This will result in less diamond loss. A roller bit should be used if much core or caved material is left in the drill hole.

5. Don't throw a diamond bit into the tool box. Wash it off at the end of a run, disconnect it from the barrel, and put it away carefully. Never use a wrench on the diamond area. It is a diamond tool - treat it as such.

6. Don't force a diamond bit. The diamonds are set for maximum performance. If penetration rate in a uniform formation decreases, with bit speed and feed rate remaining the same, take off the bit. More damage is done to diamond bits through pressing to obtain another barrel of core than in any other way. If the bit is continued in service too long, the exposed diamonds are pulled out, and the loose stones riding around the bottom of the hole can quickly destroy the entire bit.

7. Check the rods and joints for leaks. Split or improperly connected rods can seriously reduce the circulation and cause overheating of bits.

8. Check the core barrels to make certain they are straight. Pay particular attention to the core barrel head.

9. Feed the drill with a steady pressure. Increasing or decreasing pressure and bit speed in a given formation normally will not increase rate of penetration but it will increase operating costs.

10. Keep an accurate record of the lengths of drill rods and tools in use. Trusting to memory can be expensive. In trying to remember odd lengths of drill rod, many a driller has become confused and dropped a string of tools 10 to 15 feet because he thought they were already on the bottom.

Tools for Advancing Bore Holes

Auger Bits

Many types of auger bits are available on the market. Helical or worm-type bits, sometimes called flight augers, are the most common. These are usually made in sections which may be added just as drill pipe is added. The augered material is brought to the surface by the helical action of the auger. A flight auger is useful for rapid advancement of holes. Since continuous flight augers mix materials throughout the hole, it is impossible to obtain a sample representative of one horizon. Where it is necessary to obtain a sample for logging or other purposes, augering should be stopped and a split-tube or other sampler substituted.

Other types of augers may have open or semi-closed sides. These have the advantage of less mixing of material than helical augers. The SCS has developed a set of auger bits, termed bucket auger bits, which are especially adapted for use with power augers for logging homogeneous materials and obtaining representative disturbed samples. These bits are shown in Figure 2-20. The open slat-type is adapted for use in cohesive materials, the closed cylindrical type in non-cohesive materials, and the semi-closed cylindrical type in intermediate materials.

The diameter of auger bit to use depends upon the purpose of the bore hole. The minimum diameter should not be less than three inches. Larger bits are required for relief wells. Auger bits may be used with either a rotary drilling rig or power auger. A different tool joint at the top of the auger bit, or a sub, may be required for use on different rigs.

Barrel Auger

The so-called "dry barrel sampler" (Figure 2-21) may be used with a core drill as a substitute for the auger bit. It is a completely closed cylindrical auger with no cutouts on the sides of the barrel. The cutting bit should have a slightly smaller inside diameter than the inside diameter of the barrel, to assist in removing the sample.

The sampler can be used as a substitute for an auger bit in cohesive soils. Water circulation is required for its use. The barrel is pushed into the soil with a rotary motion as with an auger bit. After the barrel has been removed from the hole, the sample is forced out and onto the sample catch pan by water pressure. This method of boring is much faster than dry augering with bucket augers in most soils, since it eliminates the time-consuming removal of materials from the auger bit by hand. As may be seen in Figure 2-21, the barrel is of very simple construction and can be made in any machine shop from casing, a modified casing shoe, and and adapter.

Chopping, Fishtail, and Jetting Bits

Chopping, fishtail, and jetting bits are used to detach and clean out material accumulated inside the drive pipe or casing. Water is pumped through the string of drill rods and discharged through ports at the face of the bit. Bits have different types of chopping edges designed for cutting into different types of materials. Hard steel alloys are commonly used to prevent excessive wear. Chopping, fishtail, and jetting bits come in a variety of shapes and sizes, the shape depending upon the type of material and size on the diameter of casing used. Normally a chisel or wedge-shaped bit is satisfactory for cohesive materials. Cross-chopping bits are designed for use in coarse gravel and boulders. Fishtail bits (Figure 2-22) are used for soft rock. A 2-5/8 bit is generally used in 3-inch casing. Large fishtail bits, 20 inches in diameter, often prove useful for installing relief wells.

Roller Bits

Roller bits usually have three sets of rollers with meshing, self-cleaning, hard-surfaced teeth. They are used for advancing holes in overburden and rock when no cores are required. This type of rock bit is commonly used in conjunction with augering to cut through rock after which augering is continued with a slightly smaller bit. The teeth are flushed by drilling fluid flowing out of vents in the base of the bit, and the cuttings are carried up through the hole.

Roller bits are manufactured in various sizes ranging from 2-3/8 inches to more than a foot. A tri-cone roller bit is shown in Figure 2-22

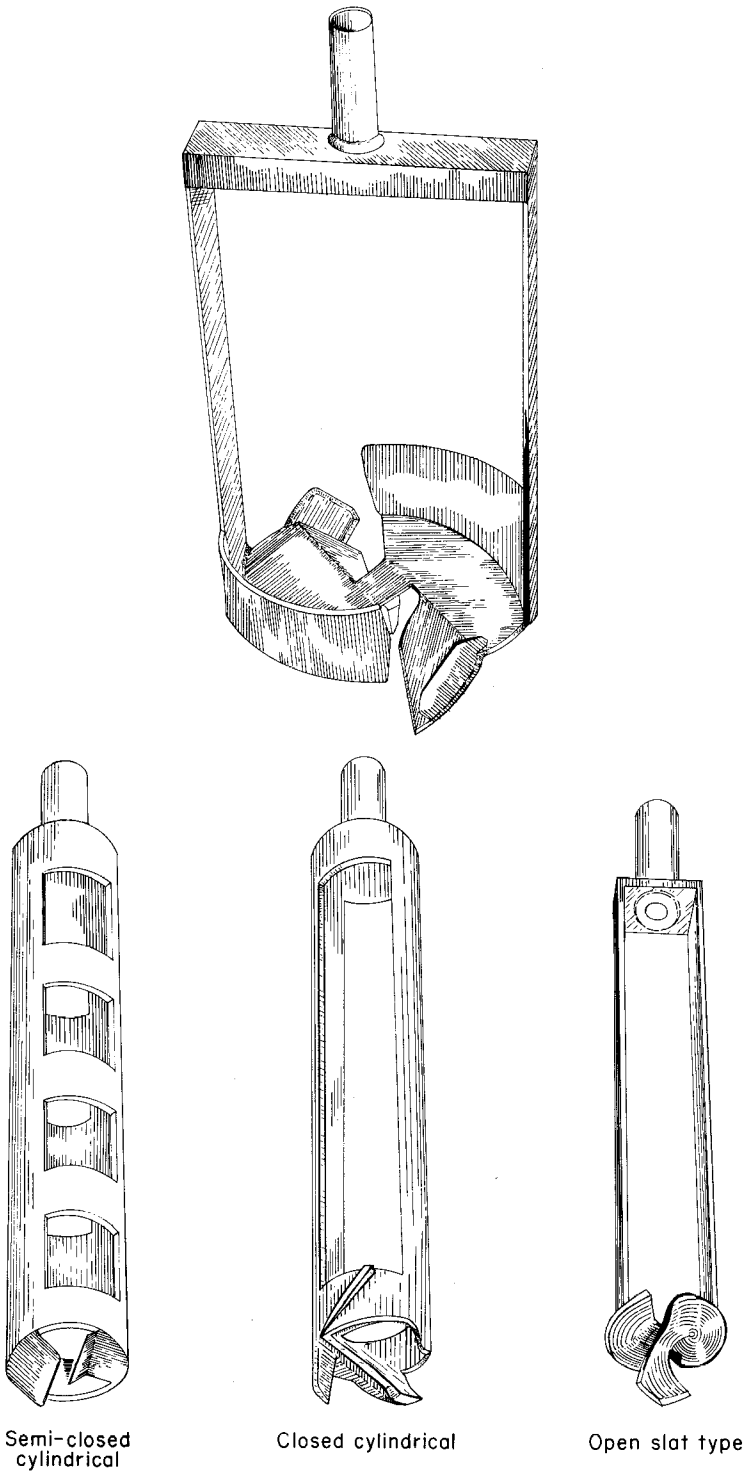

Figure 2-20 Various Types of Bucket-Auger Bits

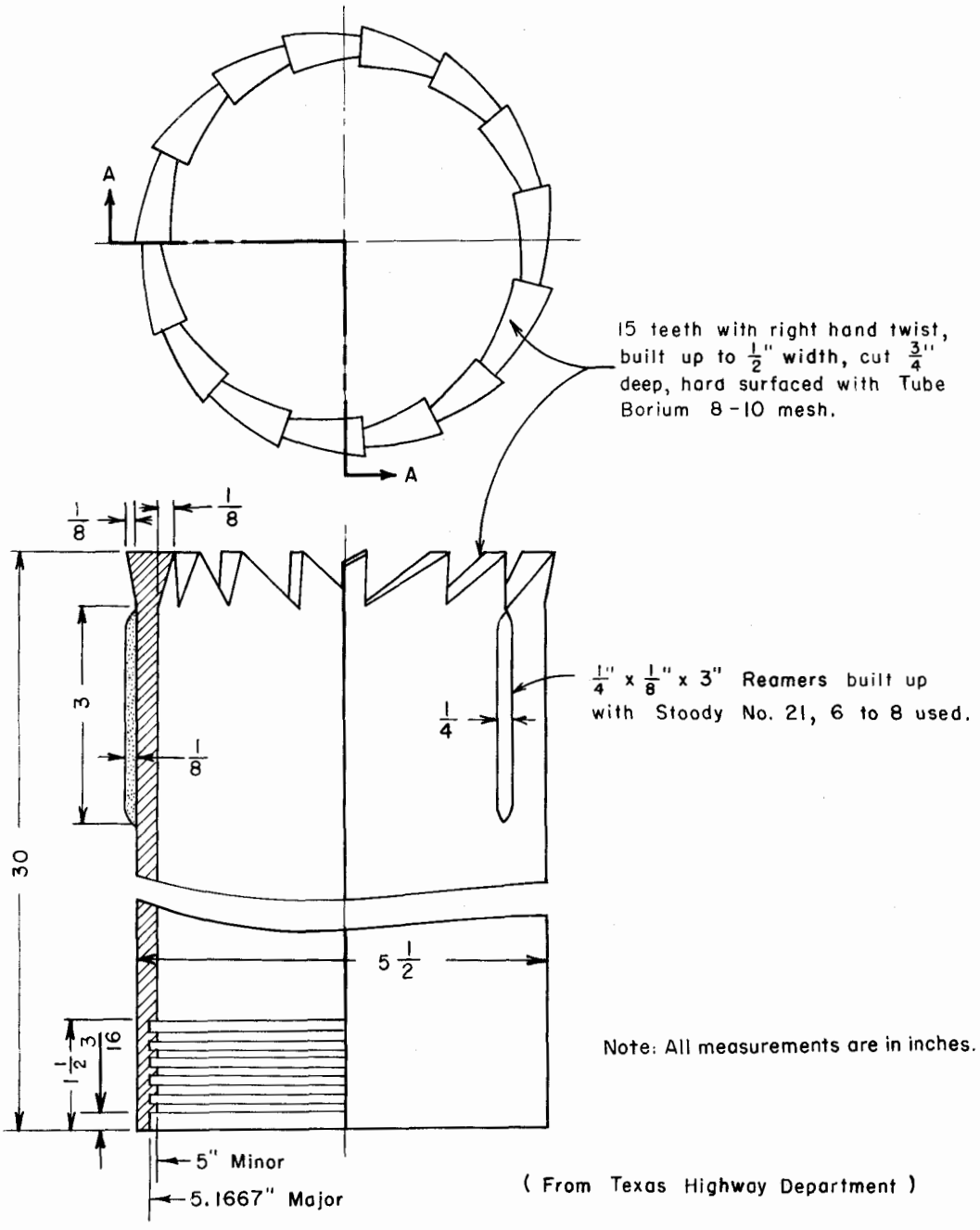

Figure 2-21 Dry Barrel Samples

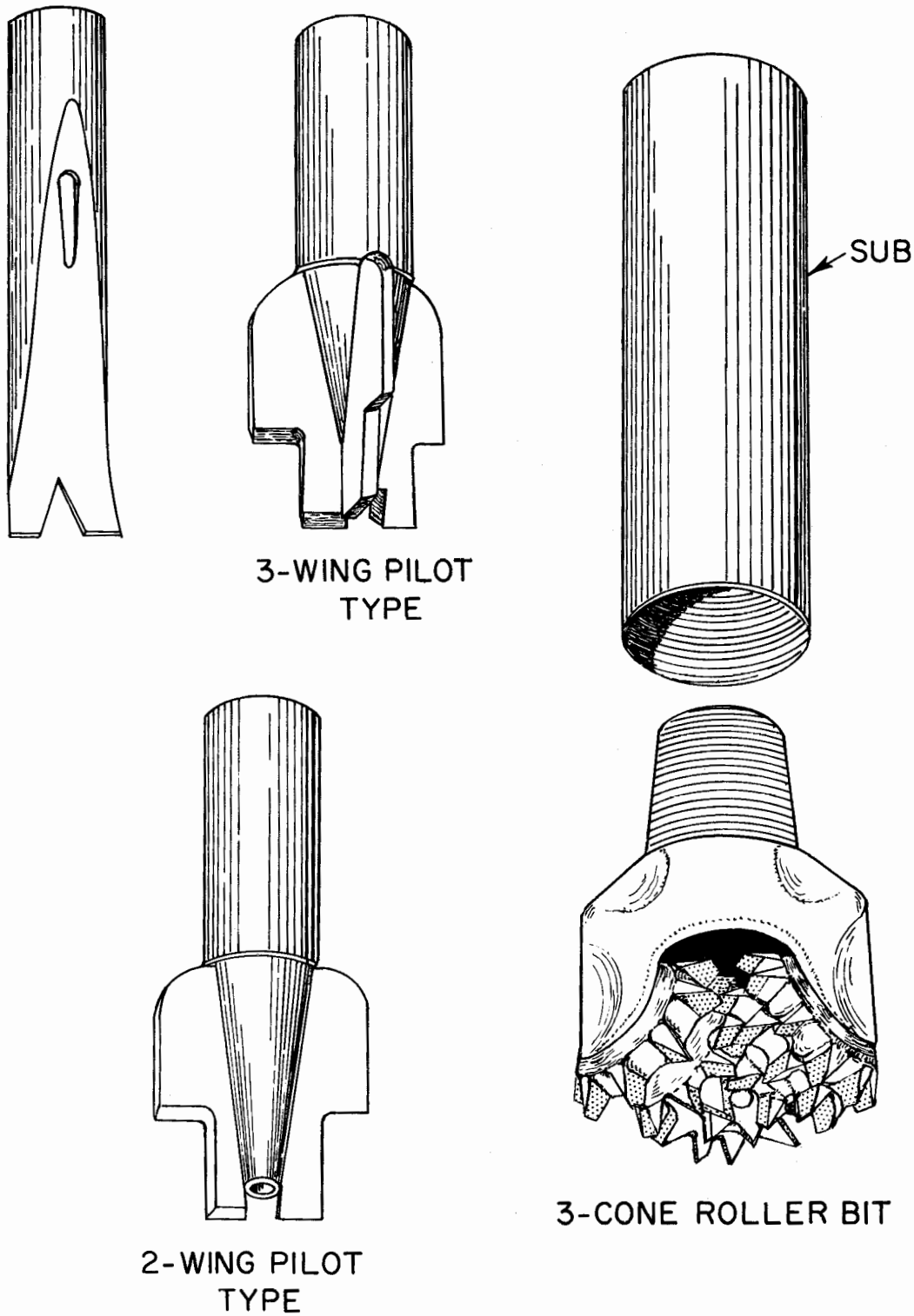

Figure 2-22 Various Types of Fishtail and Roller Bits

Other Drilling Equipment

General

In addition to the cutting and sampling tools outlined on the foregoing pages, certain additional equipment is needed to carry out boring and sampling operations. Needed and optional miscellaneous equipment is described on the following pages.

Drive Hammers

Drive hammers (Figure 2-23) are required for driving casing and for conducting standard penetration tests. A 140-pound hammer is required for the standard penetration test and heavier hammers are used for driving and removing casing. They may be operated manually or automatically. All drill rigs should be equipped, at least, with the 140-pound hammer. Where it is anticipated that considerable driving of casing might be necessary, an additional heavier drive hammer will result in more efficient operations.

Drill Rod and Couplings

Table 2-10 lists the various sizes of drill rods and couplings which are normally recommended for SCS work.

Many types of tool joints and drill rod couplings are available. Some types, such as those with tapered thread joints, are more subject to wear and to splitting of the female joint or box than others. The non-tapered flush joint, three threads per inch, is satisfactory.

Drill rod is normally manufactured with a box on each end. It is good practice to use a drill rod adapter or sub on each end. The female connection is made by means of a pin to box sub screwed into one end of the pipe. The male connection is made by means of a pin to pin sub screwed into the other end. When the subs become worn or damaged, they can be replaced at less cost than replacing the entire section of drill rod.

Drill rod not exceeding ten-foot length (ten feet, six inches with subs on both ends) is best adapted for site investigations. Twenty-foot lengths of drill rod are cumbersome to handle and transport. It is desirable for the mast of a rotary drill to be of sufficient height to handle at least two ten-foot lengths with subs (21 feet). This greatly expedites placing and removing tools from deep bore holes. The number of sections needed for a particular drilling rig will depend on the maximum number of feet which might be bored with the rig (seldom more than 100 feet), plus several spare rods for replacement in event of damage.

Solid drill rods are used with power augers where water circulation is not used. Flush joint drill rod of standard "AW" size, 1-3/4 inch outside diameter, or "BW" size is satisfactory for most power auger operations.

Since the joints need not be watertight, a simple joint such as a square pin and box, connected by a drive pin, is satisfactory.

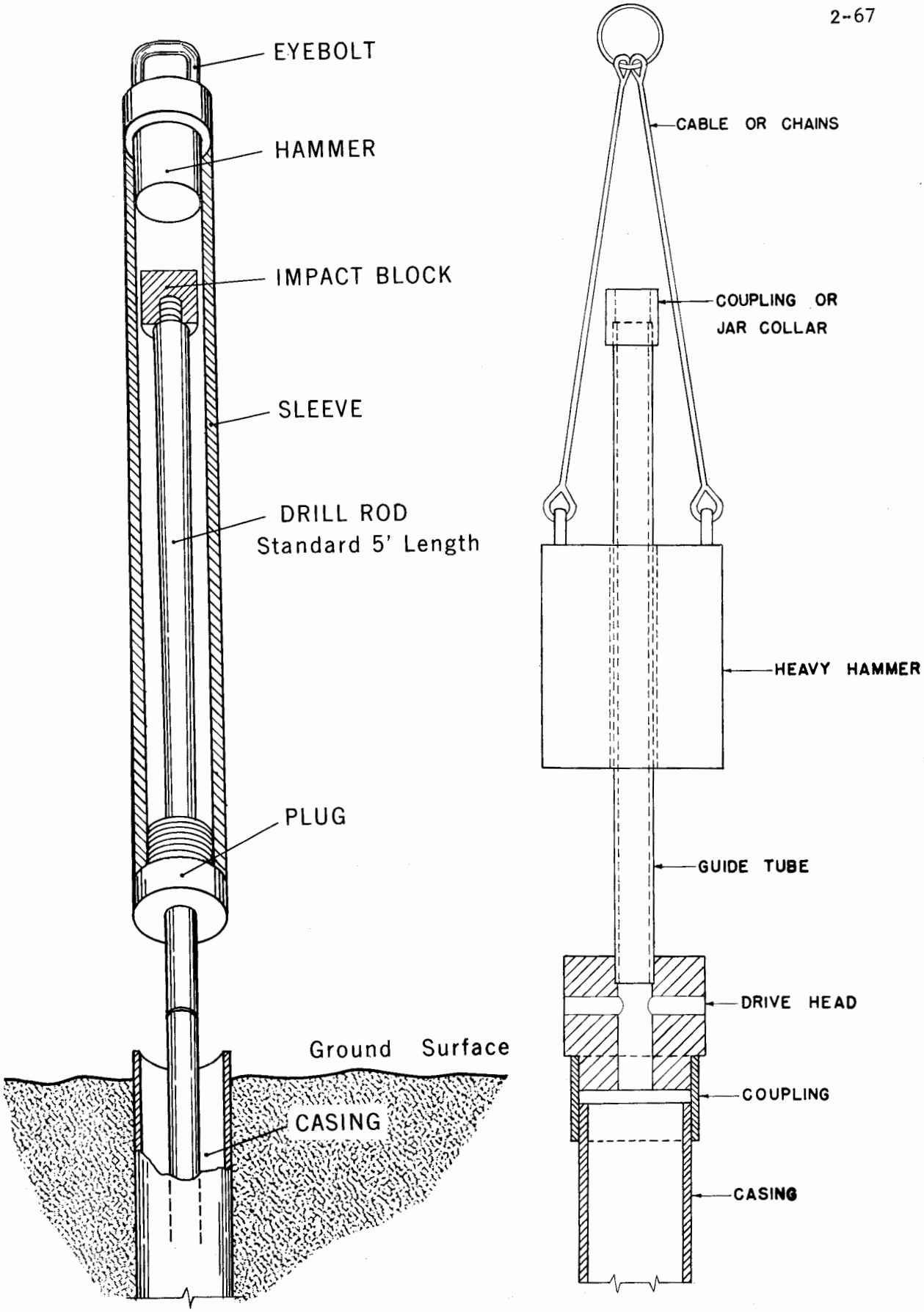

Figure 2-23 Safety and Casing Drive Hammers

Normally three 10-foot, two 5-foot, and two 2-foot lengths of drill rod will be ample for augering.

Clean-Out Tools

Clean-out tools are necessary for cleaning out bore holes preparatory to sampling. Materials which contaminate the sample or which may damage the sample must be removed. The type of tool and method required depends upon the nature of material to be removed. Certain types of cutting tools used for advancing holes such as barrel and bucket augers, leave relatively clean dry holes. Other types may leave gravel, slurry, water, drilling mud and other material in the hole. When the drilling hole contains slurry and drilling mud only, these materials may be removed by washing and flushing. Other types of materials require special tools. Some of these are described as follows:

Hole bailer - A hole bailer is useful for removing water and fine slurry. Its principal use is to remove water in the measurements of groundwater level. The outside diameter of the bailer should be one inch smaller than the hole diameter and preferably five feet long. It should have a dart bottom valve. A bailer of this type is shown in Figure 2-24.

Clean-out tools - Hole-cleaning tools perform the function of removing loose soil and rock particles from the bottom of a hole before samples are taken. Various types of cleaning tools have been designed to operate in various soil conditions. These tools include jetting wash pipe with scrapers, clean out jet augers, and sludge barrels. Some of these are illustrated in Figure 2-24.

Sample Catch Pan

A sample catch pan is needed when augering with either a rotary drilling rig or power auger. When the auger bit is raised, the pan is placed under it and the soil knocked into it. The material from the pan is then dumped in piles representing 1.0 to 2.0 foot increments for visual inspection. Normally this pan should measure about two feet by two feet. It may be fabricated locally.

Barrel Rack

A barrel rack will also be helpful to remove cores from double-tube soil and rock core barrels. A typical rack of this type is shown in Figure 2-25. It should be designed to fit the sizes of barrels being used. It is not available on the market and must be specially fabricated.

Slush Pits

Portable, or tank-type, slush pits are sold by some drilling equipment companies for use with rotary drill rigs. They may be needed where hard rock or gravel beds prohibit digging of adequate slush pits. Each time the drilling rig is moved, the mud and water must be removed from the tank to make it light

enough to move. When possible, it is easier and faster to dig a small pit or sump for the drilling fluid at each hole. This is particularly true for shallow drilling and frequent moving from hole to hole.

Miscellaneous Equipment

There are many additional tools and pieces of equipment which facilitate drilling operations. Some are optional while others are necessary to carry out certain cutting and sampling procedures. The uses of some tools such as boulder busters, fishing and recovery tools, water swivels, foot clamps, and pulling plates are quite obvious and need no further description. (See Figure 2-26.) Some additional equipment which may be useful in expediting site investigations is described briefly in the following section.

Water And Tool Trucks

If the source of water is remote from the site, considerable drilling time may be lost by continual interruptions for replacement of water. Where it is anticipated that such conditions may be encountered repeatedly, it may be advantageous to have a separate water and tool truck.

Mobile Trailer

Drilling parties may be equipped with a mobile trailer or field office. These trailers should be equipped with desk, filing cabinet, butane heating stove, butane hot plate for melting wax and drying samples, and cabinets in which diamond bits and other equipment may be kept.

Miscellaneous Items

Other items which may be useful include testing kits for gypsum, calcium carbonate, montmorillonite, or other minerals, a hand level, sieves, a Brunton compass, and geologic maps and literature on the area. A dumpy level, level rod, and aneroid barometer may also be useful. A mirror is useful in reflecting sunlight into drill holes. Oxyacetylene welding equipment is very useful for periodic rebuilding of bits with the borium or other hard alloys, and for general field repairs to the drilling equipment and vehicles.

Drill Rigs

The term "drill rig" implies all of the equipment necessary to operate cutting and sampling tools. In general, it embodies such items as the power unit, derrick, drillhead, draw works, transmission, controls, and other appurtenances. Drill rigs may be truck, trailer, or skid-mounted. (See Figure 2-27.

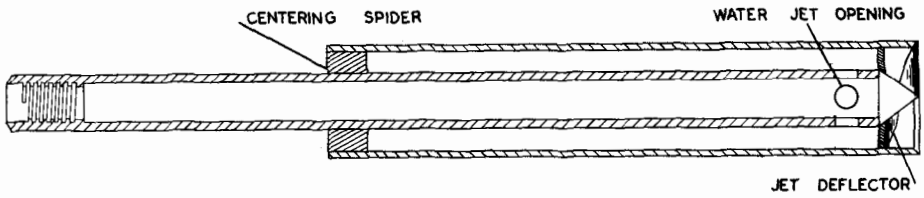

STANDARD CLEANOUT AUGER

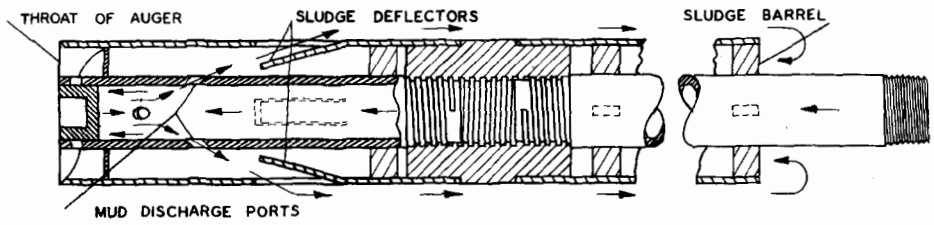

CLEANOUT AUGER
WITH SLUDGE BARREL

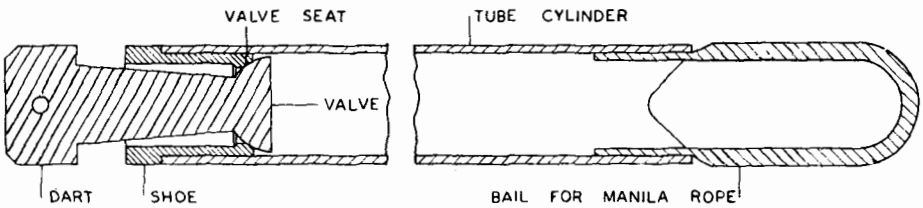

DART VALVE BAILER

Figure 2-24 Hole Bailer and Clean-Out Augers

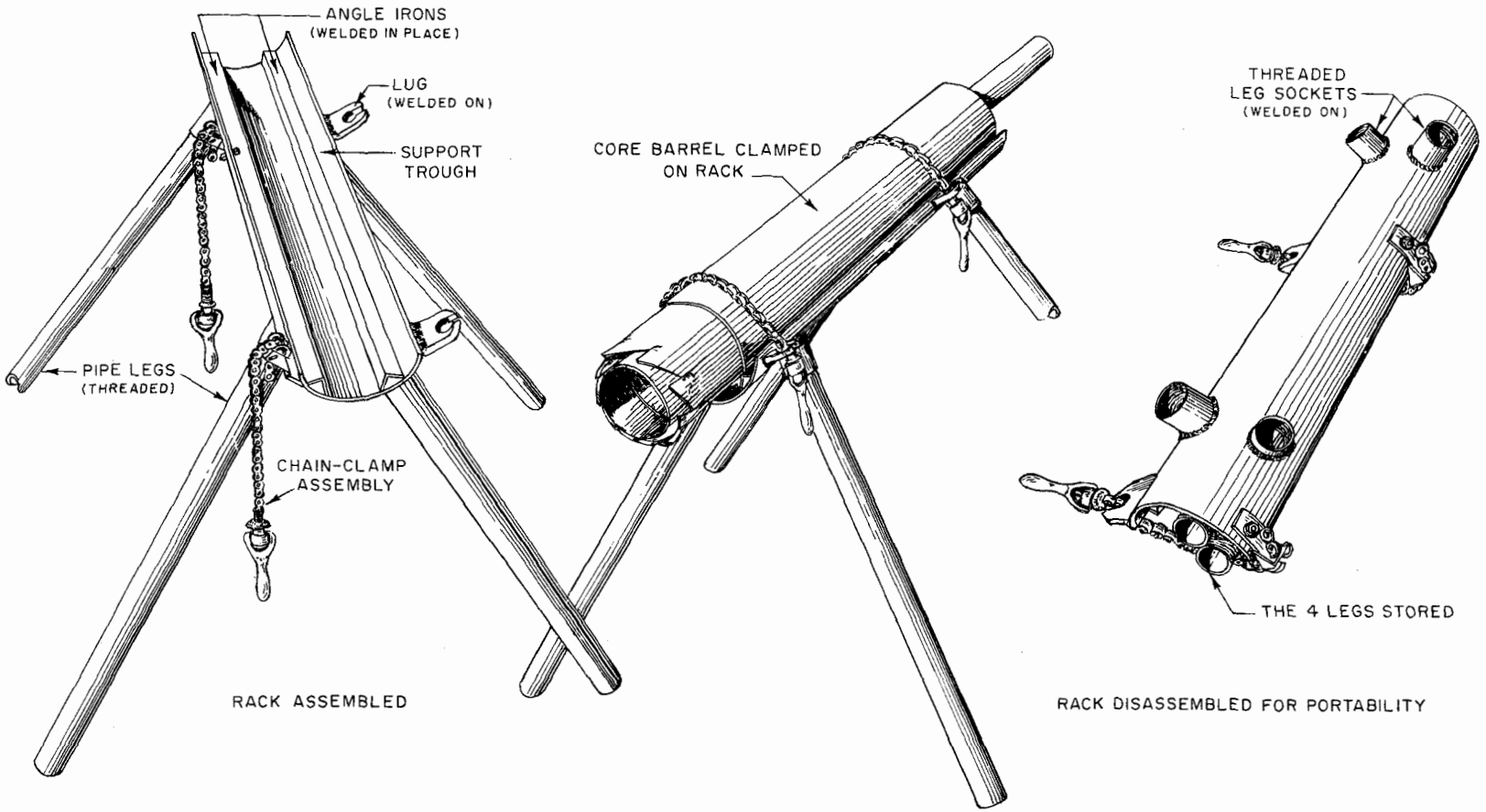

Figure 2-25 Barrel Rack with Barrel in Place

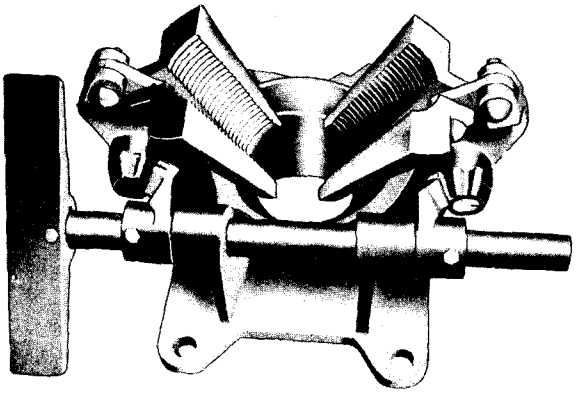

Safety foot clamp

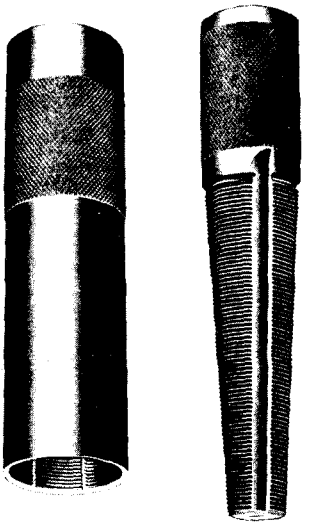

Drill rod taps

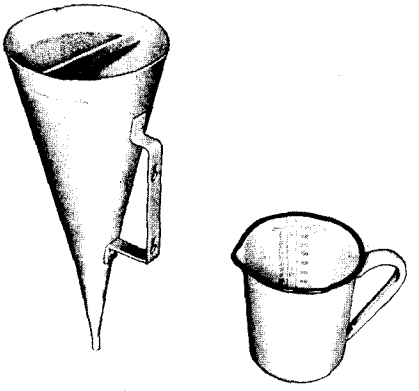

Marsh funnel and graduated cup

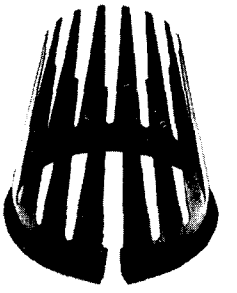

Core catcher (spring type)

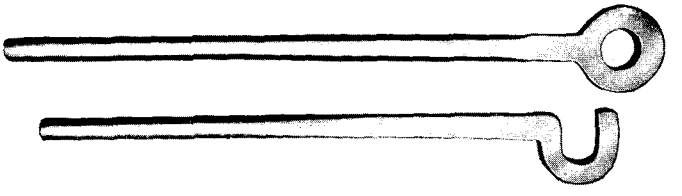

Holding irons

Figure 2-26 Miscellaneous Equipment

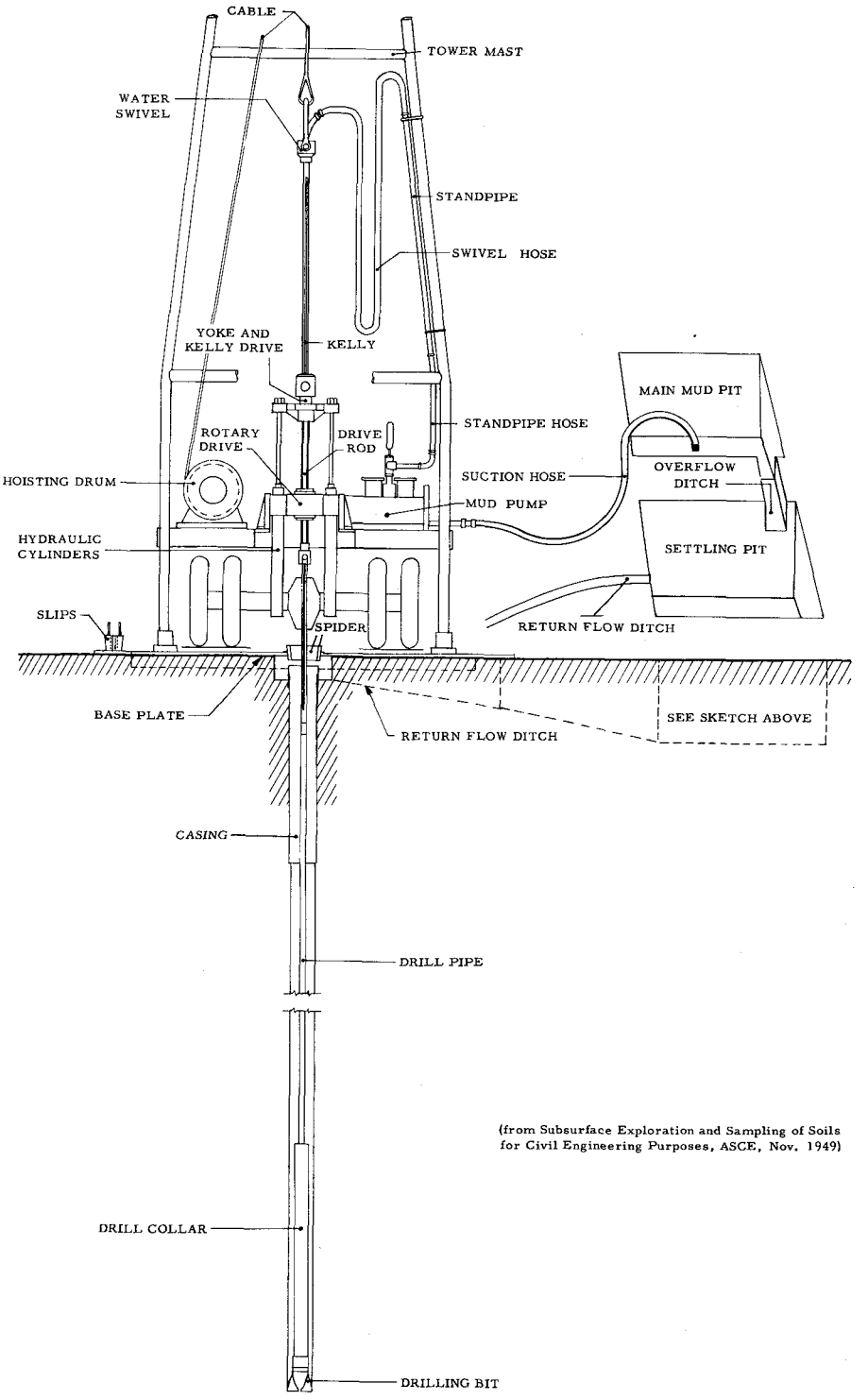

(from Subsurface Exploration and Sampling of Soils for Civil Engineering Purposes, ASCE, Nov. 1949)

Figure 2-27 Rotary Drilling Rig

There are many types of drill rigs available on the open market. Each is capable of performing certain kinds of work. Most can be augmented in respect to component parts and mounting. The selection of the proper drill rig to carry out a particular work load depends on numerous conditions. These include the anticipated work load in respect to size and purpose of proposed structures; the nature of site conditions in respect to character of materials to be bored, depth of boring, and sample requirements; terrain; and other conditions.

Guidance in the selection of adequate drill rigs to meet conditions to be encountered in the work load of a particular state may be obtained from the E&WP unit serving that state.

Stabilizing Bore Holes

Casing

Temporary casing or lining of the bore hole with steel pipe is the most positive method of stabilizing a bore hole. It is normally required for certain methods of advancing holes such as percussion drilling.

Many types of standard and special pipe are used as casing. Recessed outside couplings provide the strongest joint and are commonly used in soils exploration. An open joint is used under normal conditions, but a butt joint is often preferred when the casing is to be driven through hard ground or ahead of the boring. Repeated use will damage the threads of open joints and cause beading and upsetting of butt joints. Flush jointed casing has a smaller resistance to driving and withdrawal than casing with outside coupling.

The lower end of the casing is generally protected by a casing shoe of hardened steel, with an inside bevel so that displaced materials will be forced into the pipe.

Because of the expense and time consumed in casing rotary core drill holes, it normally is not used where holes can be stabilized with drilling mud. Casing is required for the installation of relief wells. In this respect the purpose is to hold back wet, loose formations while the filter pack material is being placed around the well screen.

Drilling Fluids

An uncased shallow bore hole of the type usually drilled by rotary core drilling methods can ordinarily be stabilized with a properly proportioned drilling fluid or "mud" (Table 2-11). Drilling muds consist of highly colloidal gel-forming clays. Native clays may also be added to the drilling fluid. The drilling fluid forms a relatively impervious lining or "mud-cake" on the side walls of the bore hole. Weighting materials such as ground barite may be added to the drilling fluid to

increase its specific gravity and prevent caving of the hole in troublesome soils or when the fluid must carry very coarse-grained materials in suspension. Two slush pits should usually be dug downslope from the drill hole, with a small channel connecting them and the drill hole. The drilling fluid will then flow from the hole to the first pit, where the coarse material will settle out, and then to the second pit, where the mud can be picked up for recirculation (see Figure 2-27). Sand should be removed from the pits as it accumulates. If this is not done, the pump and the sampler may become clogged with sand. If coarse material is not present, one slush pit may suffice.

When using drilling fluids, the pump pressure and discharge should be hand controlled for soils and soft erodible rock so that the rate of circulation of drilling fluid can be controlled independently of bit speed. If the rate of circulation is too slow, or the bit pressure too great, the bit and fluid passages will plug. If the flow is too great (this is often the case), erosion of the core and soil below the bit will result. In the latter case, the drilling fluid may be forced to seek a path inside the cutting shoe, alongside the soil core, and through the vents, thereby eroding or removing part of the core. Generally, the pump pressure should be the minimum amount necessary to circulate the mud freely and carry the cuttings from the hole.

Pumps should have a control for regulating water pressure. If the pump has a separate power plant, pump pressure can be adjusted independently of bit speed.

Rigs which have a common power plant to turn the bit and run the pump, should be equipped to bypass part of the fluid, and reduce flow to the sampler.

Table 2-11 Approximate Proportions of Mud Mixtures 1/

Purpose of drilling mud	Approximate proportions of material per barrel of water 2/	Viscosity 3/	Descriptive consistency
Assisting cutting operations by the sampler	10 to 30 pounds of bentonite	Variable as needed	Variable as needed
For lifting cuttings from hole	10 to 15 pounds of bentonite for fine-grained soils	Slightly higher than water	Thin cream
	30 pounds of bentonite for coarse-grained material	About 1.3 times the viscosity of water	Very thick cream
For supporting the drill hole	30 pounds of bentonite and 5 pounds of barite	About 1.3 times the viscosity of water	Very thick cream
For assisting to hold the sample in the sampler	10 to 30 pounds of bentonite and 0 to 10 pounds of barite	Slightly higher than water to 1.3 times the viscosity of water	Thin cream to very thick cream

1/ (U.S.B.R. Earth Manual, Tentative Edition with Revisions, 1951, 1958).

2/ One barrel equal to 50 gallons.

3/ Viscosity is measured by a Marsh funnel (see Figure 2-26) which is calibrated with water at 72° F. The time required for a given amount of water to flow through the funnel is considered as 1.0. The value listed above is the relative time for the same amount of mud mixture to flow through the funnel.

SCS NATIONAL ENGINEERING HANDBOOK

SECTION 8 -- ENGINEERING GEOLOGY

CHAPTER 3. SAMPLES

CONTENTS

	Page
Determining sampling needs	3-1
Foundation	3-1
Principal spillway	3-2
Emergency spillway	3-2
Borrow areas	3-2
Reservoir basins	3-3
Relief well and foundation drain locations	3-3
Stream-channel and other areas	3-4
For soil stabilization	3-4
Undisturbed samples	3-4
Minimum size requirements	3-4
Field notes	3-5
Packaging	3-5
Disposition of rock cores	3-6
Disturbed samples	3-7
Size	3-9
Methods of obtaining	3-9
Sample containers	3-10
Labeling, numbering, and shipping	3-10

FIGURES

Figure

3-1 Expanding packer for sample tube 3-6

Table

3-1 Amount of material needed for various soil mechanics tests... 3-8
3-2 Minimum field-sample size for various gradations of material. 3-9
3-3 Capacity of various sample bags 3-10

CHAPTER 3. SAMPLES

Samples are obtained for soil mechanics testing to determine the physical properties of materials and how they behave under specific conditions. The results of these tests provide a basis for predicting the behavior of the materials during construction and operation of a structure. Such data furnish a basis for developing certain aspects of the design to provide a safe, economical, and practical structure.

To serve the intended purpose adequately, samples must be representative of the horizon sampled. They must be of suitable size and character so that the desired tests can be performed. The kind of samples to be taken at a particular site depends on the nature of the materials and on the size and purpose of the structure. The number of samples needed depends on the variability of the materials. The minimum requirements for sampling are outlined by group classification in chapter 5.

Determining Sampling Needs

After completing phase 1 of a detailed site investigation (chapter 6), the geologist and engineer must determine what materials should be sampled and what tests are needed. The character of the material and the tests to be performed govern the size and kind of sample required. The selection of equipment and the method of obtaining samples are controlled by site conditions, character of the material, depth of sampling, and the size and kind of samples needed. The kinds of samples to be taken for different locations and tests are outlined in the following pages.

Foundation

Take undisturbed samples of questionable materials at the intersection of the centerline of the dam with the centerline of the principal spillway. Take undisturbed samples at other points along the centerline of the dam if materials of questionable bearing strength, compressibility, or permeability are encountered that cannot be correlated with strata at the intersection of the centerlines of the dam and principal spillway. Always consider taking additional undisturbed samples if the proposed dam is to be more than 35 feet high.

Take 25-pound disturbed samples from each distinct horizon in a proposed cutoff-trench area for compaction analysis if the material that might be excavated is suitable for use in the embankment. Take 4-pound disturbed samples of all other soil horizons and of the same horizons from different holes if they are needed to verify correlation.

Take cores of compaction-type shales for slaking (wetting-drying) and freezing-thawing tests. Foundations of these materials may require special treatment, such as spraying with asphalt or immediate backfilling of the cutoff trench on exposure. Rebound following unloading may also

be a problem in some types of shale. The geologist and engineer should jointly decide what laboratory tests are needed for both soil and rock samples.

Principal Spillway

In addition to samples from the intersection of the centerlines of the dam and principal spillway, take additional undisturbed samples of any other materials of questionable bearing capacity that are beneath the centerline of the proposed principal spillway.

If rock is to be excavated, take undisturbed cores of rock materials. To protect them from weathering, the samples of some rock cores must be dipped in paraffin and stored indoors.

Emergency Spillway

Take large disturbed samples of any material proposed for use in the embankment. If rock is to be excavated, take cores of the rock material.

Although soft shales may be classified as common excavation, it is desirable to obtain cores for later inspection by prospective contractors. If there is any question about the suitability of the rock materials for use in the dam, send cores or samples to the laboratory for freezing-thawing, wetting-drying, rattler, and other tests that will help to determine their physical characteristics.

Borrow Areas

Take large disturbed samples of each kind of unconsolidated material that can be worked as a separate zone or horizon. For classification, collect small samples of materials that are of such limited extent or so distributed that they cannot be worked separately or placed selectively in the fill. Although these less abundant materials generally are mixed with adjoining materials during borrowing operations, their inclusion in samples from the more abundant materials or more extensive borrow zones may result in erroneous evaluation. Laboratory identification of the index properties of these less abundant materials results in better evaluation of the effect and use of various mixtures.

Materials with the same Unified soil classification and from the same horizon and zone can be composited by taking approximately equal amounts of material from each hole that is to be included in the composite. But like materials from significantly different topographic elevations or from different stratigraphic elevations should not be composited.

Do not take composite samples in areas where high salt content, montmorillonitic clay, or dispersion are suspected. In these areas, collect small individual samples from each hole. Samples with like characteristics are composited in the laboratory or testing section after the index properties have been evaluated. The geologist and engineer should furnish guidance on laboratory compositing, based on field distribution of the materials.

On the soil sample list, form SCS-534, show from what holes and at what depth in each hole the materials in a composite sample were taken. Give estimates of the quantity of borrow material represented by each sample on form SCS-35 or in the geologic report.

It is not necessary to sample surface soil that is to be stripped from the site, stockpiled, and later placed on the completed embankment. Since this surface soil is not to be compacted to a required density, compaction tests are not needed.

For sites at which the borrow material is wet and is expected to remain wet during construction, place several samples in sealed pint jars or plastic bags. These samples are needed to determine the field moisture content.

In borrow areas where the water table is permanently high, the collection of borrow samples of cohesive materials below the water table serves no useful purpose unless the area can be drained.

In the geologic report and on form SCS-356, specify what tests other than compaction are needed.

Show the location of all samples on both the plan and the cross sections of the borrow area on the geologic investigation sheets.

Reservoir Basins

Take large disturbed samples that are representative of the bottoms and sides of farm ponds and storage reservoirs for sites where moderate or excessive leakage is suspected. If local materials are to be used for blanketing or sealing, obtain 25-pound samples of each kind. To determine the permeability of reservoirs or pond basins, collect samples from the surface 12 inches of the present or proposed bottom and sides. Where borrow is to be removed from the pond area, take samples from below the proposed borrow depth for permeability tests.

Relief Well and Foundation Drain Locations

If there are permeable strata that may require drainage, take undisturbed samples, if possible, for permeability determinations. If the geologist and the engineer conclude that relief wells or foundation drains are needed, the aquifer must be fully delineated and representative samples taken. Take undisturbed samples of all strata from the surface of the ground to 2 feet below the bottom of the permeable stratum.

It is impossible to obtain an undisturbed sample of some kinds of permeable material. It may therefore be necessary to determine the permeability or transmissibility (permeability times thickness) of an aquifer or aquifers in the field by field permeability tests. If field permeability tests are made, take representative samples for use in the design of the well and filter.

Where corrosion or incrustation of the relief-well screen is a problem take a sample (1 quart) of the ground water. Send it to the laboratory for such tests as alkalinity, chlorides, iron, total hardness, and pH value.

If investigations of the centerline of the dam indicate that foundation drains may be needed, take 4-pound disturbed samples for mechanical analysis of each horizon in which a drain may be placed. These samples usually are of permeable material, but where it is necessary to pass the drain through impermeable horizons, collect samples of this material also.

Stream Channel and Other Areas

If gravels and sands from channels or other nearby areas seem to be suitable for drains or filters, take samples for mechanical analysis.

For Soil Stabilization

Any samples needed for soil-stabilization measures should be representative of the area where the measures are to be installed. The number of samples to be taken depends on the areal extent of the treatment and on the kind or kinds of material. Tests for soil cement or other chemical soil-stabilization measures require very large (75 pound) samples.

Undisturbed Samples

Undisturbed samples are those taken in such a manner that the structure and moisture content of the original material are preserved to the maximum extent possible. Undisturbed samples are used to determine shear strength, consolidation, and permeability. Rock cores are used to determine strength, permeability, and weathering characteristics. Undisturbed samples are generally collected from foundation materials beneath embankments and appurtenant concrete structures when information on natural strength, consolidation, or permeability is needed.

The important considerations for undisturbed samples are that they be representative and that any disturbance of structure and moisture conditions of the sample be reduced to an absolute minimum. This requires close attention to sampling procedures, tools, packaging methods, and transportation.

Undisturbed samples from a depth of more than 15 feet usually must be obtained with drilling equipment. In the absence of drilling equipment, their collection involves the excavation of test pits from which cubes or cylinders of soil can be taken. Cubes, cylinders, or clods of soil can also be cut from the sides of open pits and cut banks, both natural and artificial. See chapter 2 for sampling equipment and methods.

Minimum Size Requirements

The Soil Mechanics Laboratory requirements for trimmed sample sizes and for trimming allowance vary with the homogeneity of the material, the maximum grain size, and the kind of test required.

To meet these requirements, the minimum diameter of undisturbed samples is 5 inches for triaxial shear and horizontal permeability tests and 3 inches for all other tests. In homogeneous material, however, where reliable test results can be obtained from specimens cut from succeeding vertical depths, the minimum diameter for triaxial shear tests is 3 inches.

These minimum diameters apply to material in which the maximum grain size is no more than 2 mm. In materials containing fragments larger than 2 mm., the minimum diameter for undisturbed samples may need to be larger.

The recommended minimum size for rock core samples is NX (2-1/8 inches), but to complete some holes, a smaller diameter may be necessary.

Field Notes

Take detailed field notes for each undisturbed sample. They should include the following items as appropriate.

1. Hole No. and location.
2. Complete log of hole above and below samples.
3. Method of drilling and size of hole.
4. Type and size of test pit.
5. Casing (type and size) or drilling mud mixture used.
6. Ground-water elevation and date and time measured.
7. Length of drive and length of sample recovered, or percent recovery.
8. Size of sample (diameter).
9. Elevations or depths between which sample was taken.
10. Method of cleaning hole before sampling.
11. Other items, such as difficulties in obtaining sample.

With a permanent marking device, label the sample container. Record the following information on the label.

1. Watershed, site No., and location.
2. Date.
3. Hole No. and sample No.
4. Elevations or depths between which sample was taken.
5. Top clearly identified.
6. Name of person who took the sample.

Packaging

Samples collected in a double-tube core barrel are encased in metal liners when they are removed from the barrel. Plug both ends of these containers with expanding packers or metal caps. Wooden plugs can also be used. If nails are used to fasten the plugs, be careful not to disturb the sample while nailing.

Expanding packers (fig. 3-1) are preferred for sealing the ends of thin-wall tubes, but metal caps, tape, and wax can also be used. Be careful that there is no air space between the sample and the seal. Place labels and all identification on the tube or the liner, not on the ends.

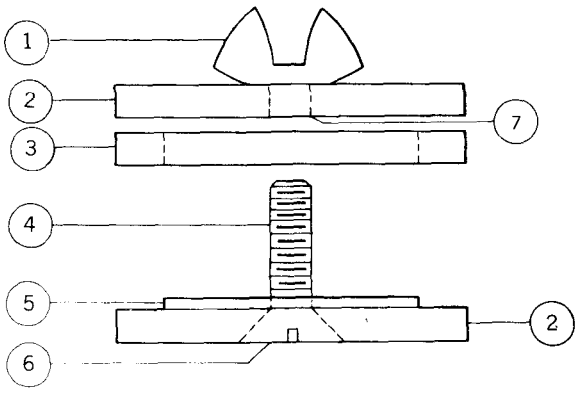

1. Brass wingnut.
2. Aluminum bar stock.
3. Gum rubber gasket.
4. Flathead brass machine screw.
5. Washer.
6. Head sealed with waterproof cement.
7. Drill.

Figure 3-1.--Expanding packer for sample tube.

If they are tightly confined, samples collected by hand excavation can be placed in tin cans, Denison tins, or similar containers.

Seal all undisturbed samples thoroughly with a high-melting-point wax. Beeswax or a mixture of beeswax and paraffin is recommended. These waxes do not shrink away from the container so much as paraffin alone, usually have a higher melting point, and thus deform less in hot weather. The wax seal should fill all spaces between the sample and the container, as well as cover both ends of the sample. Pack all undisturbed samples in excelsior, sawdust, or other shock-absorbent material and crate them. Two or more samples can be boxed together for shipment, but they should not touch each other.

Use reusable boxes. They are to be returned by the laboratory along with sample bags, thin-wall tubes, Denison liners, expanding packers, and the caps for tubes and liners. Mark the boxes with precautionary information, such as "Handle with Care," "This Side Up," "Do Not Drop," and "Protect from Freezing."

Disposition of Rock Cores

Store samples of easily weathered rock cores, such as shale, at the nearest SCS office. If they are left outdoors and allowed to weather, they may give prospective contractors an erroneous impression of their original hardness.

Handle rock cores carefully and store them in boxes of dressed lumber or other suitable materials. The storage boxes should be adequate for cores about 4 feet long. Usually no more than four cores should be stored in each box. The cores should be separated by longitudinal partitions. Use separation blocks wherever core is lost. Embossed metal tape or other

acceptable materials can be securely fastened in the box to indicate by elevation the beginning and end of each reach of core in proper sequence as taken from boring. Place cores first in the top compartment next to the hinged cover and proceed toward the front of the box in the order cores are taken from the drill hole, filling each compartment from left to right in turn (as one reads a book). Note the elevations on separation blocks for those sections in which a core could not be obtained. It is desirable to photograph the cores after they are boxed.

Storage boxes can be fitted with hinged or telescopic covers. On the inside of the cover stencil the box No., project name, site No., and hole No. Stencil the same information on the outside of one end of the box.

Disturbed Samples

To be adequate, disturbed samples must be representative of the stratum, material, or area being sampled. They are used to make qualitative estimates of the probable behavior of materials. This kind of sample is the easiest to obtain and is important for the classification of materials and for many soil mechanics tests. But if quantitative information on in-place strength, consolidation, or permeability is needed, disturbed samples are of little value. The important consideration for disturbed samples is that they be representative of the stratum from which they are taken.

Size

The amount of material needed for laboratory testing depends on two factors: (1) Number, kind, and purpose of tests to be performed and (2) particle-size characteristics of the material to be sampled.

The Soil Mechanics Laboratory has established three general size groups for disturbed samples that are to be sent to the laboratory for testing.

"S" (small) samples are used only for index and classification tests, such as particle-size distribution (mechanical analysis), dispersion, soluble salts, liquid limit, and plastic limit. "S" samples usually consist of 4 to 10 pounds of material collected for purposes of comparison and correlation of stratigraphy and other general soil characteristics of foundations or borrow areas.

"L" (large) samples are used for more comprehensive analyses including index and classification, moisture-density relationships (compaction), permeability, shear, consolidation, and filter-design tests. "L" samples usually consist of 25 to 50 pounds of borrow and spillway material proposed for use in embankments, of reservoir bottom material proposed for sealing, and of aquifer material to be relieved by wells or drains.

"XL" (extra-large) samples are used for special compaction tests, soil-cement tests, and tests for durability as riprap or drain materials.

"XL" samples consist of 75 to 150 pounds of sand or fine-grained materials proposed for soil-cement stabilization or of 40 pounds of rock materials proposed for use as riprap, rock toes or berms, and drainage blankets.

Table 3-1 shows the amount of material that is needed to perform the various soil mechanics tests. These amounts form the basis for the recommended minimum sizes of field samples (table 3-2).

Table 3-1.--Amount of material needed for various soil mechanics tests

Test	Particle size used in test	Amount of material needed
Index and classification tests:		Pounds
Sieve analysis (gravel)--------	Passing 3-inch sieve, retained on No. 4 sieve.	3
Hydrometer analysis, dispersion, salts, and Atterberg limits.	Passing No. 10 sieve----	3
Comprehensive tests:		
Compaction----------	Passing No. 4 sieve-----	8
Permeability----------	Passing 3/4-inch sieve--	7
Reservoir sealing----------	Passing 3/4-inch sieve--	25
Shear:		
For materials in which 90 percent passes No. 4 sieve, specimen size is 1.4 inches by 3 inches.	Passing No. 4 sieve-----	5
For materials in which less than 90 percent passes No. 4 sieve, specimen size is 2.8 inches by 6 inches.	Passing 1/2-inch sieve--	18
Consolidation----------	Passing No. 4 sieve-----	2
Specific gravity (coarse fraction).	Passing 3-inch sieve, retained on No. 4 sieve.	2
Special filter-design tests----	Passing 3-inch sieve----	20
Soil-cement tests----------	Passing 3/4-inch sieve--	70

To fulfill individual test requirements, the size of the sample to be sent to the laboratory varies with the gradation of the natural material. Most laboratory tests are performed on materials passing a No. 4 sieve. Larger samples are therefore needed of materials that contain significant amounts of larger particles. The minimum sizes of field samples for various gradations of materials are shown in table 3-2.

Table 3-2.--Minimum field-sample size for various gradations of material[1]

Gradation of material and sample size group	Maximum particle size	Minimum field sample size
		Pounds
Gradation No. 1, natural materials with 90 percent passing No. 4 sieve:		
"S" sample	3 inches	4
"L" sample	3 inches	25
"XL" sample	3 inches	75
Gradation No. 2, natural materials with 50 to 90 percent passing No. 4 sieve:		
"S" sample	3 inches	10
"L" sample: 1 sample	No. 4 sieve	25
"L" sample: 1 sample	3 inches	25
"XL" sample	6 inches	150
Gradation No. 3, gravel materials with less than 50 percent passing No. 4 sieve:		
"S" sample	3 inches	20
"L" sample	3 inches	40
"XL" sample	6 inches	150

[1] Note that the maximum particle size to be included in field samples ranges from 3 inches for "S" and "L" samples to 6 inches for "XL" samples. Estimate the percentage of over-size materials excluded from the field samples and record it along with descriptions of the samples on forms SCS-533 (Log of Test Holes) and SCS-534 (Soil Sample List). It is not necessary to screen samples to determine the exact amounts of the various particle sizes. Visual estimates of the particle sizes and the quantities involved are adequate.

Put disturbed samples that are to be sent to the laboratory for moisture determination in wide-mouth jars or evacuated plastic bags and seal immediately.

Methods of Obtaining

Representative disturbed samples are obtained by hand excavation or, at a greater depth, by bucket-type augers or drive samplers (table 2-8). Be careful not to contaminate the sample with materials from other strata. Continuous-flight augers and wash borings are unsatisfactory. Take proportionate volumes of all material between the selected elevations in the sample hole. If the sample so obtained is too large, it can be reduced by quartering after it is thoroughly mixed.

Sample Containers

Place disturbed samples in heavy canvas bags. Each State should maintain a supply of these bags.

Table 3-3 relates the size of sample bags to capacity. If it is necessary to retain the field moisture content for laboratory determination, such as in borrow material that is wet and is expected to remain wet, use polyethylene plastic liners inside the canvas sample bags. Suitable liner sizes are given in table 3-3.

Table 3-3.--Capacity of various sample bags

Sample-bag measurements	Plastic liner		Capacity
	Thickness	Size	
Inches	Inches	Inches	Pounds
9 x 15	0.0015	5 x 3-1/2 x 14	10
16 x 24	0.002	10 x 4 x 24	50
16 x 32	0.002	10 x 8 x 30	75

Labeling, Numbering, and Shipping

Tag bag samples of disturbed material with cloth (linen) shipping tags that show the following information: (1) Location of project (State and town or community), (2) site or project name and No., (3) fund classification of project (FP-2, WP-1, WP-2, CO-1), (4) location of sample on the site (centerline station, borrow grid, etc.), (5) test hole No., (6) field No. of sample, (7) depth of sample, and (8) date and name of collector. Number composite samples and show this number on the tag. Record the Nos. of the individual holes from which the composite sample was taken and the field Nos. of the samples on form SCS-534.

Since tags are often pulled off in transit, place a duplicate tag inside the bag.

To expedite the sorting, numbering, and handling of samples in the laboratory, the field No. of a sample should start with the test-hole No., followed by a decimal that indicates the No. of the sample from that hole. Examples are sample Nos. 1.1, 1.2, 1.3, which are three samples from test hole No. 1 (in the centerline of the dam), and sample Nos. 101.1 and 101.2, which are two samples from hole No. 101 (borrow area).

Under separate cover send the standard forms containing the descriptions of the samples and logs of the test holes to the laboratory along with copies of plans and profiles at the same time the samples are shipped.

Send a copy of the geologic report to the laboratory as soon as possible. A summary of the material to be sent to the laboratory follows.

1. Form SCS-533, Log of Test Holes.
2. Form SCS-534, Soil Sample List--Soil and Foundation Investigations. On this sample list show the individual holes, or the samples, included in composited samples if such mixtures are prepared in the field. Record the method of transportation and information concerning Government bills of lading. List the samples on form SCS-534 in this order: Foundation area, principal spillway, drainage and relief wells, channel, emergency spillway, and borrow area.
3. Forms SCS-35A, -35B, and -35C, Plan and Profiles for Geologic Investigations.
4. Copy of the geologic report, including the supplement on interpretations and conclusions.

At the time the samples are sent to the laboratory, send copies of the various forms and of the geologic report including the supplement to the State office. This information is needed to prepare form SCS-356, Request for Soil Mechanics Laboratory Test. Form SCS-356 is an administrative form used to commit funds to reimburse the laboratory for the cost of sample analyses. An alternate procedure is to supply the State office a copy of form SCS-356 that already contains the information that the geologist needs to supply.

Large bag samples are usually shipped by freight or express. Be sure that each bag is correctly labeled and addressed. Small bag samples can be packaged together and shipped by freight or express. Single small bag samples not exceeding 4 pounds in weight can be sent by franked mail. Get a Government bill of lading from the State office if samples are shipped by freight or express.

CHAPTER 4. LOGGING TEST HOLES

CONTENTS

	Page
Field notes	4-1
Graphic logs	4-3
Recommended scales	4-4
Geologic profile	4-4
Distribution of graphic logs and profiles	4-6
Written logs	4-6
Form SCS-533	4-6
Distribution	4-8

FIGURES

Figure		Page
4-1	Example of a geologic profile	4-5

CHAPTER 4. LOGGING TEST HOLES

Logging is the recording of data concerning the materials and conditions in individual test holes. It is imperative that logging be accurate so that the results can be properly evaluated to provide a true concept of subsurface conditions. It is equally imperative that recorded data be concise and complete and presented in descriptive terms that are readily understood and evaluated in the field, laboratory, and design office.

The basic element of logging is a geologic description of the material between specified depths or elevations. This description includes such items as name, texture, structure, color, mineral content, moisture content, relative permeability, age, and origin. To this must be added any information that indicates the engineering properties of the material. Examples are gradation, plasticity, and the Unified soil classification symbol based on field identification. In addition, the results of any field test such as the blow count of the standard penetration test must be recorded along with the specific vertical interval that was tested.

After a hole is logged, it should be plotted graphically to scale and properly located both vertically and horizontally on the applicable cross section or profile on form SCS-35. Correlation and interpretation of these graphic logs indicate the need for any additional test holes and their location and permit the plotting of stratigraphy and structure and the development of complete geologic profiles. Analysis of the geologic profile frequently gives more information on the genesis of deposits.

Field Notes

Data from test holes can be logged directly on the standard form or in a separate notebook. Field notes should contain all the data for both graphic and written logs and also any information that is helpful to a geologist in making interpretations but that is not entered in the log.

Items to be considered in logging a test hole follow.,

1. Hole No., location, and surface elevation.--Number holes in the sequence in which they are drilled within each area of investigation. These areas have been assigned standard Nos. (chapter 7). Show location by station No. or by reference to some base. Show elevation above mean sea level if it is known, otherwise elevation from an assumed datum.
2. Depth.--Record the depth to the upper and lower limits of the layer being described.
3. Name.--In unconsolidated materials, record the name of the primary constituent first, then as a modifier, the name of the second most prominent constituent, for example, sand, silty. Usually two constituents are enough. If it is desirable to call attention to a third, use the abbreviation w/_____after the name, for example, sand, silty w/cbls (with cobbles).

4. Texture.--Record size, shape, and arrangement of individual minerals or grains. In consolidated rock, descriptive adjectives are usually enough. In unconsolidated material, use descriptive adjectives for size and give an average maximum size in inches or millimeters. Record shape by such terms as equidimensional, tabular, and prismatic and by the degree of roundness (chapter 1). Record arrangement by estimated relative amounts. Record the gradation for coarse-grained unconsolidated materials and the sorting for poorly graded materials.
5. Structure.--Describe any features of rock structure that you observed, such as bedding, laminations, cleavage, jointing, concretions, or cavities. Where applicable, include information on size, shape, color, composition, and spacing of structural features.
6. Color.--Record color for purposes of identification and correlation. Color may change with water content.
7. Moisture content.--Note whether the material is dry, moist, or wet.
8. Mineral content.--Record identifiable minerals and the approximate percentage of the more abundant minerals. Describe any mineral that is characteristic of a specific horizon and record its approximate percentage even though it occurs in very minor amounts. Record the kind of cement in cemented materials.
9. Permeability.--Estimate the relative permeability and record it as impermeable, slowly permeable, moderately permeable, or rapidly permeable. If a field permeability test is run, describe the test and record the results.
10. Age, name, and origin.--Record geologic age, name, and origin, for example, Jordan member, Trempeleau formation, Cambrian age; Illinoian till; Recent alluvium. Use the term "modern" for sediments resulting from culturally accelerated erosion, as established by Happ, Rittenhouse, and Dobson in 1940. Distinguish between Recent and modern deposits. For valley sediments, identify the genetic type of the deposit and the association to which it belongs. Such identification helps in correlation and in interpreting data from test holes. Similarly, knowing that a material is of lacustrine or eolian origin or that it is a part of a slump or other form of mass movement helps in evaluating a proposed dam site.
11. Strength and condition of rock.--Record rock condition by strength (chapter 1), degree of weathering, and degree of cementation.
12. Consistency and degree of compactness.--Describe consistency of fine materials as very soft, soft, medium, stiff, very stiff, and hard. Describe degree of compactness of coarse-grained soils as very loose, loose, medium, dense, and very dense (tables 2-1 and 7-2).
13. Unified soil classification symbol.--For all unconsolidated materials give the Unified soil classification symbol. In this classification, borderline materials are given hyphenated symbols, such as CL-ML and SW-SM. Ordinarily, this borderline classification cannot be determined in the field. If there is any doubt about the proper classification of material, record it as "CL or ML" and "SW or SM" and not by the borderline symbols. Record the results of field-identification tests, such as dilatance, dry strength, toughness, ribbon, shine, and odor (chapter 1).

14. Blow count.--Where the standard penetration test (chapter 2) is made, record the results and the test elevation or depth. This test shows the number of blows under standard conditions that are required to penetrate 12 inches or, with refusal, the number of inches penetrated by 100 blows. The latter is commonly recorded as 100/d, where d equals the number of inches penetrated in 100 blows.
15. Other field tests.--If other field tests are made, record the results and describe each test well enough so that there is no doubt as to what was done. Examples are vane-shear test, pressure test, field-density test, field tests for moisture content, acetone test, and the use of an indicator such as sodium fluorescein to trace the flow of ground water.
16. Miscellaneous information.--Record any drilling difficulties, core and sample recovery and reasons for losses, type and mixture of drilling mud used to prevent caving or sample loss, loss of drilling fluid, and any other information that may help in interpreting the subsurface condition.
17. Water levels.--Record the static water level and the date on which the level was measured. Wait at least 1 day after the hole has been drilled to measure the water level to allow time for stabilization.

Graphic Logs

For correlation, show individual graphic columns at their correct location and elevation on forms SCS-35A, -35B, and -35C, Plan and Profiles for Geologic Investigation. Use the geologic symbol patterns shown in the legend on form SCS-35A. It is important that graphic logs be plotted to scale and properly referenced to elevation. Use mean sea level (m.s.l.) for the reference plane if possible or an assumed datum if m.s.l. is not known. Graphic columns that are off the centerline profile may show as being above or below the ground level of the profile, depending on the ground elevation of the boring. In this event, make a notation at the top of the column that shows the location in respect to the centerline of the profile.

Indicate the location of the static water table by a tick mark at the correct elevation and record the date of measurement. Show the Unified soil classification system symbol next to each stratum on the graphic column as a further guide to interpretation and sample requirements. To the left of the graphic log, record the blow count opposite the specific horizon tested. Use adjectives and their abbreviations given in the legend on form SCS-35A for other salient features of the material, for example, wet, hard, mas. (massive). On both plans and profiles number the holes according to their location. On plans show the location of holes by the proper symbol and indicate whether the hole was sampled.

Plot the graphic log as soon as a particular hole has been drilled. Where the space provided on SCS-35A, -35B, and -35C is too small to permit plotting at a scale that shows the information legibly, use form SCS-315. An HB pencil is recommended for plotting. Keep the pencil point fairly sharp or use a thin-lead mechanical pencil. Use enough pressure to make the lines and lettering dense and opaque. Keep the work neat and accurate.

Recommended Scales

The horizontal scale used should be such that the graphic logs are spaced far enough apart for the necessary information to be shown legibly. The vertical scale used should be such that the vertical sequence can be depicted adequately. The following scales are recommended for the different features of a site.

A. Vertical--1 inch equals 10 feet. Increase it to 1 inch equals 5 feet for special situations, such as complex logs in which many thin horizons need to be delineated accurately.
B. Horizontal.
   1. Plan of site (all components)--1 inch equals 100 feet.
   2. Profiles.
      a. Centerline of dam, emergency spillway, and borrow grids--1 inch equals 100 feet.
      b. Centerline of principal spillway and the stream channel below the outlet end of the principal spillway--1 inch equals 50 feet.
      c. Centerline of foundation drains, relief-well collector lines, and sediment-pool drain lines--1 inch equals 50 feet.

      If necessary because of the size of the structures, the scales for items 1 and 2a can be reduced to 1 inch equals 200 feet, provided there is adequate space for the graphic logs.
   3. Cross section of stream channel--a scale that requires no more than 2 inches for the plotted bottom width nor more than 6 inches for the entire cross section. Usually, a scale of 1 inch equals 20 feet is practical.
   4. Cross section of emergency spillway--a scale that results in a plotted bottom width of at least 2 inches. Usually, a scale of between 1 inch equals 20 feet and 1 inch equals 100 feet is satisfactory.

Geologic Profile

Develop tentative correlation lines as soon as possible. This helps to determine where additional test holes are needed. As more graphic logs are plotted, the stratigraphic relationships become more definite. Interpretation of data in terms of the genetic classification of the deposits helps to establish correlation. Conversely, development of the geologic profile often helps to interpret the origin of the deposits. When the geologic profile is complete, it provides an interpretation of the factual information from the logs in terms of the stratigraphic and structural relationships along the plotted profile. To this profile add notations on any important condition or characteristic, such as ground-water level, permeability, density, genesis, sorting, degree of weathering or cementation, upstream and downstream continuity, mineralogy, and rock structure. Figure 4-1 shows part of the geologic profile along the centerline of a proposed structure and illustrates some of these points.

Plot profiles or sections drawn normal to the direction of streamflow as though the observer is looking downstream. Plot those drawn parallel to the direction of streamflow so that streamflow is from left to right.

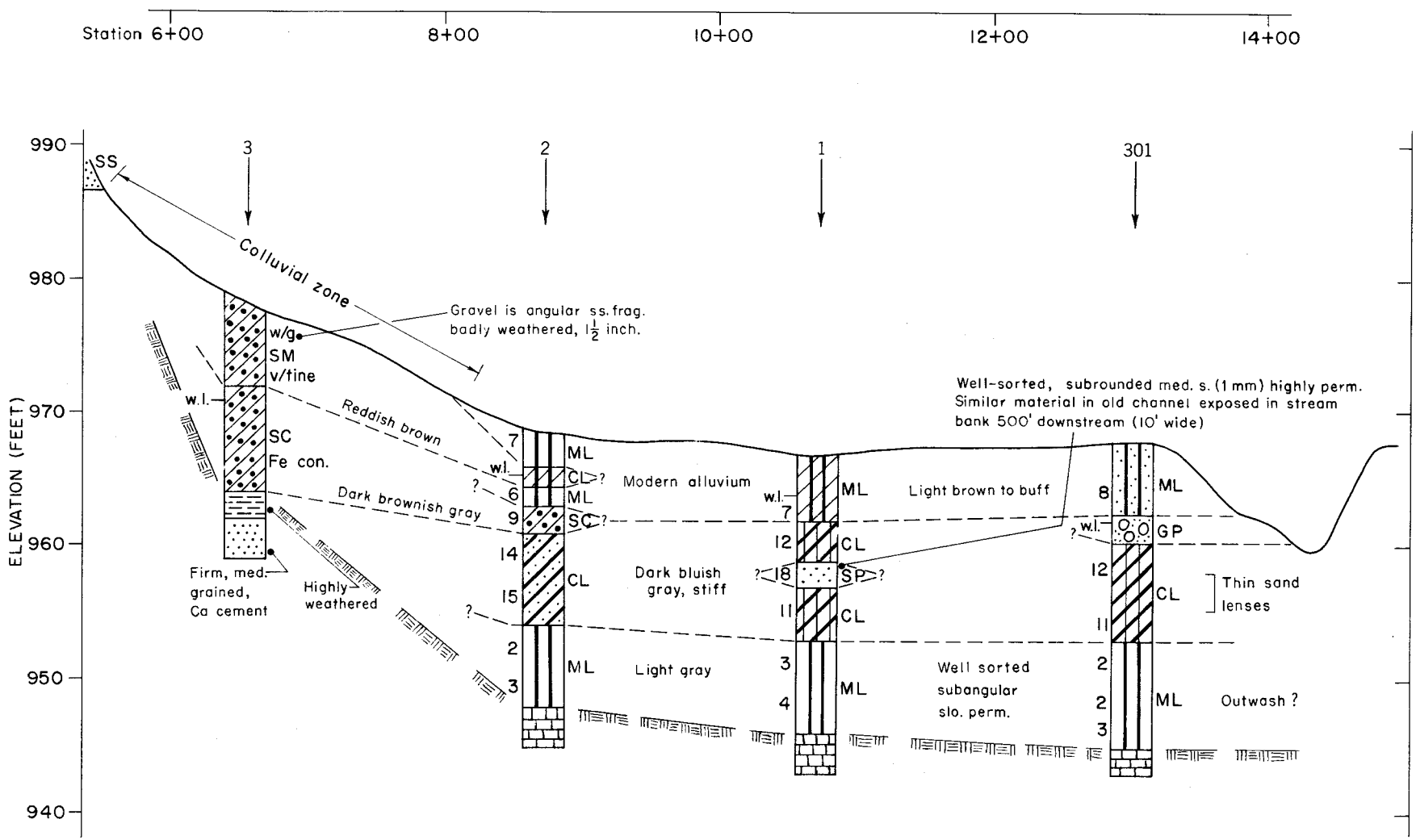

Figure 4-1.--Example of a geologic profile.

Distribution of Graphic Logs and Profiles

When a penciled draft of a field sheet is completed and checked, copies must be reproduced for various purposes. This can be done by blueline printing or photostating locally in the field or in the Cartographic Unit. Copies are needed for the geologic report, a copy of which is to go to the Engineering and Watershed Planning (EWP) Unit geologist and other copies are to accompany the design data to EWP Unit and State Design Sections. Additional copies may be needed for the geologist's files and for distribution to personnel within a State.

When samples are sent to the Soil Mechanics Laboratory or to the EWP Unit Materials Testing Section for analysis, the laboratory needs one transparency and one working copy, either blueline print or photostat, of the field sheet. These must be submitted as soon as the samples are sent to avoid delay in soil mechanics analysis and interpretations. If these copies cannot be obtained locally, send the field sheets to the Cartographic Unit and ask them to prepare the required copies and to forward them immediately to the Soil Mechanics Laboratory or the EWP Unit Materials Testing Section, or both. Send a copy of the transmittal letter to the head of the EWP Unit and a copy to the Soil Mechanics Laboratory. At this time, indicate the number of copies needed by the geologist.

The final drafting of plans and profiles, if they are to accompany final construction plans and specifications, usually is done by the Design Section serving a State. The copy of plans and profiles attached to the geologic report accompanying the design data can be used for this purpose. Lumarith stickups of standard geologic symbols are stocked in the various Cartographic Units to facilitate final drafting of plans and profiles.

Written Logs

Form SCS-533

For written logs for engineering purposes, use form SCS-533, Log of Test Holes, and form SCS-533A, Continuation Sheet. These logs are prepared from field notes and are limited to factual items. These detailed logs include common narrative descriptions of the material. Use terms that can be easily understood.

Form SCS-533 provides space for the test hole No., location, and surface elevation. Several logs may be shown on each sheet of form SCS-533. Where natural outcrops, streambanks, and gullies are used for logging and sampling, determine the elevation of the top of the outcrop and the location of the outcrop.

For "Hole Depth" show the depth in feet from the surface (0.0) to the bottom of the first stratum, or the depth from top to bottom of any underlying stratum.

The description of materials should be complete, clear, and concise. Give the geologic designation that corresponds to the standard pattern used on the graphic log first and underline it, for example, Gravel, silty.

If they can be identified by eye, describe individual particles by size, shape, and composition. Include the approximate diameter of the average maximum-size particle. If possible, indicate the relative proportion of gravel, sand, silt, and clay. Describe particle shape by such terms as angular, subangular, and rounded. Note the principal constituents of the larger particles, such as gneiss, limestone, granite, sandstone, and quartz. Indicate the presence of diatoms, gypsum, iron oxides, organic matter, platy minerals such as micas, and other materials that have an influence on engineering properties. Record color, consistency, and hardness. For fine-grained soils, note relative plasticity, dry strength, and toughness. Indicate the relationships shown by stratification, for example, "varved clay," "interbedded sand and gravel." Indicate the presence of joints and their kind, spacing, and attitude if they can be determined. Indicate consistency or degree of compactness of the materials. Record the standard blow count. Where possible, note the genesis, such as alluvium, lake deposits, and till.

For consolidated rock, include kind of rock, degree of weathering, cementation, and structural and other features in the description. Include the geologic name and age of the formation if it is known. Use the scale of rock strength (chapter 1) to describe the ease of excavation.

Show the Unified soil classification symbol as determined by field tests.

A column is provided for a description of the type and size of tool used for sampling or advancing a hole. Examples are bucket auger, Shelby tube, stationary-piston sampler, double-tube soil-core barrel (Denison type), or double-tube rock-core barrel. The abbreviations[1] that should be used for the different types of samplers are given in the following list.

Bucket auger	BA
Thin-wall open-drive (Shelby)	S
Split-tube sampling spoon	SpT
Stationary piston	Ps
Piston (Osterberg type)	Pf
Dry barrel	DB
Double-tube soil-core barrel (Denison)	D
Single-tube rock-core barrel	RCs
Double-tube rock-core barrel	RCd
Hand cut	HC

Columns are provided for sample data. It is important to show the sampling horizon and whether the sample is "disturbed" (D), "undisturbed" (U), or "rock core" (R). Show the sample recovery ratio (S), which is equal to L/H where L is the length of sample recovered and H is the length of penetration, as a percentage. Thus, if the sampler penetrates a distance of 18 inches and the sample contained therein amounts to 16 inches,

[1] Show OD size after the abbreviation, as D-5 for 5-inch Denison.

$(S) = \frac{16}{18} \times 100 = 89$ percent. This may be an important factor in the determination of fissures, cavities, or soft interbedded materials in consolidated rock.

Distribution

Distribution of completed written logs is to be the same as that for graphic logs. In copying written logs, make enough carbon copies to supply distribution needs.

CHAPTER 5. REQUIREMENTS FOR GEOLOGIC INVESTIGATIONS AND SAMPLING

CONTENTS

	Page
Intensity of site investigations	5-1
Geologic reconnaissance	5-1
Preliminary site investigation	5-1
Detailed site investigation	5-2
Classification of structure sites for geologic investigation	5-3
Group I dam sites	5-3
Group II dam sites	5-3
Group III dam sites	5-3
Minimum requirements for geologic investigations	5-4
Group I dam sites	5-4
Group II dam sites	5-5
Group III dam sites	5-5
Minimum requirements for sampling of dam sites	5-6
Group I dam sites	5-6
Group II dam sites	5-7
Group III dam sites	5-7

CHAPTER 5. REQUIREMENTS FOR GEOLOGIC INVESTIGATIONS AND SAMPLING

Requirements for design and construction vary widely depending on such conditions as size and purpose of the structure, kinds of construction materials, site conditions, and economic and safety considerations. Geologic site investigations and soil mechanics tests are geared to requirements for design and construction. Hence the procedures and intensity of investigation and the kinds of samples taken vary from site to site. This chapter outlines the requirements for preliminary and detailed site investigations and sampling and also the minimum requirements for intensity of study and for sampling for soil mechanics tests.

Intensity of Site Investigations

Before beginning specific site studies, the geologist should make a reconnaissance survey of the watershed or general area to become familiar with the general geologic situation. He should then make a preliminary geologic investigation of all structure sites to determine geologic conditions and characteristics of materials (both consolidated and unconsolidated) pertinent to design. This should be done regardless of purpose of the structure, source of funds, or contractor. Detailed subsurface exploration or the collection and testing of samples may not be necessary for small, no-hazard structures, such as farm ponds, drop structures, or chutes, to be built in areas of generally homogeneous materials. For these structures, the engineering characteristics of the material at the site need only to be recognized and evaluated on the basis of experience in the area.

Geologic Reconnaissance

Before starting specific site studies, the geologist should become familiar with the general geologic conditions of the area. This can be done by reviewing available data, by examining topographic and geologic maps, and by making a reconnaissance survey. Data gathered during the reconnaissance are primarily descriptive and should include the items in the following list.

1. General geology of possible dam sites.
2. Geologic conditions that may affect channel stability and improvement.
3. Geologic conditions that may influence ground-water movement and recharge.
4. Ground-water conditions.
5. General character of streams and valleys, including steepness of grade and side slopes, bed material, and whether the stream is aggrading or degrading.
6. General availability of suitable construction materials.

Preliminary Site Investigation

The geologist should make a preliminary or surface examination of every site where a structure is planned. This investigation should

include a thorough inspection of outcrops, cut banks, and other surface exposures and an examination of erosion conditions, landslides, seeps, springs, and other pertinent conditions in and adjacent to the watershed to obtain the basic information needed to evaluate the geologic conditions and the character of materials at the site.

The purpose of the preliminary investigation is to determine the geologic feasibility of the site and the extent of detailed subsurface investigation that will be required and to furnish the engineer with enough information to make sound cost estimates. At some sites, the preliminary investigation may furnish enough data on geologic conditions and engineering characteristics of materials for design purposes.

Detailed Site Investigation

A detailed site investigation is made to determine the geologic conditions and to provide the engineer with information for use in design and construction. Usually, detailed subsurface investigations require separate scheduling of equipment such as backhoes, dozers, power augers, and core drills.

Detailed subsurface investigations must be of sufficient intensity to determine all the conditions that may influence the design, construction, and functioning of the structure. The extent of geologic investigation required for a particular dam site depends on (1) complexity of site conditions, (2) size of the structure, (3) potential damage if there is structural failure, and (4) purpose of the structure.

Detailed exploration consists of two phases: (1) Determining and interpreting subsurface conditions and (2) taking samples for soil mechanics tests.

During phase 1, test holes must be put down and logged in the foundation, emergency spillway, and borrow areas. These test holes must be deep enough to insure penetration of all pertinent materials. The number and spacing of test holes must be adequate for correlation in both longitudinal and transverse directions and to the distance needed for complete interpretation of any condition that may influence the design of the structure. Geologic structural features, such as faults, folds, and joints, must be identified and located. Enough information must be obtained on unconsolidated deposits to classify them genetically and to determine their location, thickness, and extent. Test holes can be put down by drilling or by excavating open pits or trenches. Where drilling methods are used, the standard drop-penetration test (blow count) is to be made in cohesive foundation materials below the water table and in noncohesive materials where practical. This test provides a measure of the resistance of the material to penetration by the sampler and also furnishes samples of the material penetrated for identification, classification, and logging. The test is used to evaluate in-place density of the materials. Additional in-place field tests are to be made where needed.

In phase 2 of the detailed site investigation, the data gathered in phase 1 are analyzed on site and the behavior characteristics and engineering significance of the materials and conditions logged are evaluated. From this analysis and evaluation the geologist and engineer determine what materials are to be sampled and what laboratory analyses are needed. This determines the kind, number, and size of samples needed. The necessary samples are obtained by using appropriate sampling procedures. Any additional or special in-place field tests that are needed should be made.

Classification of Structure Sites for Geologic Investigation

Engineering Memorandum SCS-33 (Rev. 1960) establishes the following broad groups of structure sites to permit the association of minimum requirements for geologic investigations with maximum fill height of the proposed dam, construction materials, purpose of the structure, and the damage that might result from a sudden major breach of the earth-dam embankment (Engineering Memorandum SCS-27).

Group I Dam Sites

This group includes proposed sites for--

a. All class (c) dams.
b. All class (b) dams.
c. All dams with maximum fill height of 35 feet or more not included in class (b) and class (c).
d. All structures of the following types more than 20 feet high: Concrete or masonry arch or gravity dams, drop spillways, box-inlet drop spillways, and chutes.
e. All dams with maximum fill height of more than 20 feet where the principal purpose is forming storage reservoirs for recreation, municipal water supply, or irrigation and where the product of the storage times the height of the dam is more than 3,000.

Group II Dam Sites

This group includes proposed sites for--

a. All dams not included in class (c) or class (b) with maximum fill height of 25 to 35 feet.
b. All structures of the following types with maximum height of 10 to 20 feet: Concrete or masonry arch or gravity dams, drop spillways, box-inlet drop spillways, and chutes.
c. All dams less than 20 feet high where the principal purpose is creating storage reservoirs for recreation, municipal water supply, and irrigation and where the product of the storage times the height of the dam is between 1,000 and 3,000.

Group III Dam Sites

This group includes proposed sites for--

a. All other types of dams not included in groups I and II.

Minimum Requirements for Geologic Investigations

The following criteria establish the minimum site investigations that will provide an acceptable basis for design and construction. The investigations needed above this minimum will vary somewhat based on the complexity of the site and the class of the structure.

Group I Dam Sites

All sites in this group must be investigated under the supervision of a qualified geologist. This applies to the preliminary investigation as well as the detailed and subsurface exploration. Subsurface exploration must be of sufficient intensity to:

1. Delineate and determine engineering characteristics, continuity, relative permeability and other pertinent characteristics of all materials to the specified depth beneath the entire base and abutment area, or area of influence, of the dam and outlet structure. The structural area of influence may be far into the abutments or may be the entire reservoir basin under some geologic conditions or structure purposes.
2. Determine the attitude, location, extent, and character of such geologic features as folds, faults, joints, solution cavities, unconformities, schistosity, slaty cleavage, and bedding. In some cases, angle holes may be necessary to help define these factors.
3. Delineate the incompressible rock surface where within the depth of influence.
4. Determine the extent and character of materials to be excavated for open spillways and the character and slope stability of the material in the spillway cut slopes.
5. Determine the depth, thickness, continuity, distribution, and engineering properties of the material proposed for use as fill.
6. Determine the depth to ground water and the extent and character of aquifers.
7. Verify the presence or absence of economic mineral deposits within the area of influence.

The depth to which the above information must be obtained will in no case be less than equivalent to the proposed height of fill unless hard, massive, unweathered or otherwise unaltered rock is encountered at a shallower depth. Extend borings far enough into rock to determine its character and condition and whether it is in place.

The minimum depth of borings in weak or compressible materials, where the influence of loading by the fill may be significant to depths greater than the height of the dam, will be determined in consultation with the responsible design engineer.

For all concrete dams, the depth of borings will be no less than 1.5 times the height of the controlled head of the dam.

All borings are to be sufficiently deep and closely spaced to establish reliable correlation of strata under the entire base of the structure. The number, depth and the spacing of holes needed depend on such geologic features as regularity, continuity, and attitude of strata and character of geologic structures.

Sufficient borings must be made along the centerline of drop inlets or other conduits to provide reliable correlation of all strata from the riser to the outlet and to a depth equal to the zone of influence of the structure. Where rock occurs within the zone of influence, the investigation must accurately delineate the rock surface below the centerline of the conduit. Normally, bore holes are placed at the riser, at the intersection of the centerlines of the dam and conduit, and at the outlet, with sufficient holes in between to furnish reliable correlation.

Where an excavated emergency spillway is planned, investigations must be of sufficient intensity to determine quantity and character of the materials to be excavated, limits of common and rock excavation, suitability of the excavated material for use in construction, and erodibility of the resulting spillway channel. Each boring for emergency-spillway investigations must extend to a depth of not less than 2 feet below the bottom of the proposed emergency spillway. A sufficient number of emergency-spillway holes must extend a minimum of 20 feet below the bottom to determine the erodibility of the bulk of the material in the spillway.

Enough borings must be made in the borrow areas to identify and establish the distribution and thickness of all materials to be used for fill. All borrow-area borings should extend at least 2 feet below the expected depth to which material is to be removed unless consolidated material that is not suitable for fill is found. Determine the depth to ground water at the time of boring for all borrow-area borings.

Hydraulic-pressure tests are to be made in rock foundations and abutments of proposed dams forming storage reservoirs. This test consists of a holding test of not more than 1 p.s.i. per foot of depth below ground surface, followed by a pumping test if the pressure drop in the holding test exceeds 10 p.s.i. per minute (chapter 2).

Group II Dam Sites

A geologist is to make the preliminary site investigation and to determine what is needed in the way of a detailed site study.

The intensity of subsurface exploration and sampling needed for sites of the larger structures in group II is similar to that for group I sites. General experience in the area, present geologic information, and the preliminary geologic examination, however, may provide enough information so that a less intensive program of subsurface exploration and sampling will suffice for the sites of smaller structures in this group.

Group III Dam Sites

The intensity of investigation needed for group III structure sites can usually be determined by persons holding positions to which job-approval authority for the class of structure under consideration has been delegated by State memorandum. In areas where there is little or no experience on which to base conclusions and in areas where geologic conditions are complex, a geologist should be consulted. A geologist is to investigate those structure sites in group III that require the technical approval of the head of the EWP Unit.

For very small structures, the economic feasibility of site studies must be considered. Weigh the cost of such studies against the cost of the structure and the possible adverse effects of structural or functional failure.

Minimum Requirements for Sampling of Dam Sites

The intensity of sampling needed, like the intensity of site investigations, varies with design requirements. Thus the minimum sampling requirements can be coordinated with the various dam-site groups established to determine the intensity of geologic investigation needed.

Group I Dam Sites

It is essential that adequate samples be obtained both for field examination and for testing and analysis by a soil mechanics laboratory. This usually means taking both undisturbed and disturbed samples of unconsolidated materials and in some places obtaining rock core samples.

For all sites in group I, representative samples for classification purposes should be taken of all types of materials in the borrow, foundation, relief-well, and spillway sections.

For all sites in groups Ia, Ib, and Ic, samples for compaction and shear tests should be taken from the borrow and emergency-spillway areas. For sites in groups Id and Ie, samples for compaction tests should be taken from the borrow and emergency-spillway areas if there is not enough information or experience in the area to definitely determine the behavior of materials.

For all sites in groups Ia, Ib, and Ic and for the sites of all dams more than 25 feet high in groups Id and Ie, undisturbed samples for shear tests should be taken from all strata of fine-grained soils of questionable stability in the foundation within a depth equivalent to one-half the height of the dam.

For all sites in groups Ia, Ib, and Ic, undisturbed samples for consolidation tests should be taken of all fine-grained materials of questionable stability within a depth equivalent to the maximum height of the dam. Where compressible materials extend to depths greater than the height of the dam, the depth from which such samples should be taken must be increased. For sites in groups Id and Ie, such samples are also to be taken of questionable materials of low shear strength, such as soft clays and soft silts, in the foundations of dams more than 25 feet high.

For sites in group I, samples for chemical analysis should be taken of all water supplies to be used for construction of the embankment or of concrete appurtenances if it is suspected that the water contains a high concentration of salts (particularly sulfates and alkalies) or of humic and other acids that have a deleterious effect on construction materials.

For all sites in group I, samples should be taken of all materials proposed for stabilization by soil cement or chemical methods.

For all sites in group I, samples should be taken of reservoir and abutment materials to determine reservoir-sealing requirements if storage (other than sediment-pool storage) is to be incorporated in the design and if moderate or serious leakage is suspected.

Group II Dam Sites

For all dam sites in group II, representative samples for classification purposes should be taken of all types of materials in the borrow, emergency-spillway, foundation, and relief-well sections.

For all sites in group IIa, samples for compaction tests should be taken from the borrow and emergency-spillway areas.

For all sites in group II, undisturbed samples for shear tests are required if questionable materials of low shear strength are encountered. Soft clays and silts that develop low shear resistance because of the nature of particles are included. Usually undisturbed samples are not required for shear tests of foundation materials of dams less than 25 feet high.

Samples for consolidation tests are required under the same conditions as those outlined for shear tests. If compressible materials are encountered, samples may be needed from depths greater than the equivalent height of the dam.

The sampling requirements for permeability tests, water analyses, soil-cement tests, and reservoir-sealing tests for dam sites in group II are the same as for dam sites in group I.

Group III Dam Sites

For dam sites in group III, samples for laboratory analysis are not usually necessary if adequate information and experience is available in the area on which to base conclusions. Where such information is not available or if highly questionable conditions are found, sampling may be necessary.

CHAPTER 6. PRELIMINARY SITE INVESTIGATION

CONTENTS

	Page
Purpose	6-1
Assembly of data	6-1
Use of aerial photographs	6-2
Field study	6-3
Mapping	6-4
Report of preliminary investigation	6-4

CHAPTER 6. PRELIMINARY SITE INVESTIGATION

Soon after a dam site has been tentatively selected, the geologist makes a preliminary investigation of the site. This consists of a field study and a review of available literature and maps relating to regional geology and physiography. For watershed protection projects (Public Law 566), this preliminary investigation is usually made in the work-plan stage to obtain information needed to determine both physical and economic feasibility.

The geologist and the engineer must work together closely during the preliminary site investigation. They should discuss geologic conditions that may influence the design, construction, cost, and functioning of the proposed structure. Where these conditions appear adverse, a more intensive investigation may be required to determine site feasibility.

Purpose

The purpose of a preliminary site investigation is to establish the geologic feasibility of the site and to determine the extent and precision of detailed subsurface investigation required to obtain the information needed for design and construction. For some sites the preliminary investigation, together with experience in the area, may be adequate to determine the geologic conditions and the engineering characteristics of materials. At other sites enough information on subsurface materials can be readily obtained during the preliminary examination from test pits, hand-auger borings, trenching, or other methods so that a detailed subsurface investigation is not required. But a detailed subsurface investigation must be scheduled where enough information for design cannot be obtained with the tools available during the preliminary examination. Then the results of the preliminary examination provide a basis for planning the detailed investigation. This planning requires consideration of such items as depth, number, and location of borings; kinds and locations of samples to be taken; equipment required; requirements for clearing, staking, and mapping the site; and need for access roads.

Assembly of Data

Before beginning a field study of a site, review the available geologic, physiographic, and engineering-experience data. The usual sources of reference data are publications of the U.S. Geological Survey; State geological surveys; U.S. Department of Agriculture soil survey reports; special reports and papers in scientific publications; and Federal, State, or local engineering-experience information where available. A base map on a usable scale, topographic sheets, aerial photographs, and geologic and soil maps are also helpful. Preliminary information on the location of the proposed dams is essential. The following site information is needed.

1. Purpose of dam and reservoir.
2. Estimates of height of dam and cubic yards of compacted fill required.

3. Estimated maximum and normal pool elevations.
4. Class of structure (see Engineering Memorandum SCS-27).
5. Approximate area in reservoir basin.
6. Approximate location of emergency spillway.
7. Approximate location of outlet structure.

Geologic and topographic maps are useful for determining the general geology, and soil maps are helpful for the general delineation of boundaries of particular kinds of surface materials.

Wherever possible, the geologist should make use of the general design and construction experience and the performance of structures in the area. Interviews with engineers or other technicians familiar with the design and operation of these structures and visits to structures under construction are particularly helpful in areas where the geologist has had little or no experience. Available reports on laboratory analyses of local materials should be reviewed to determine physical and engineering properties for possible application to the site in question.

Use of Aerial Photographs

A study of aerial photographs of the general area of the site is helpful. Color tone, vegetation, landforms, and drainage patterns often are indicators of geologic features, including kinds of rock, fractures, sinks, and landslides, and of moisture and soil conditions. Stereoscopic prints provide three-dimensional impressions that help in establishing the general geology during subsequent field studies.

Tones in a photograph and vegetative pattern can indicate moisture conditions or differences in the kind of soil or rock. Very dark tones may indicate water close to the surface and very light tones, low surface moisture. Sands and gravels tend to produce light tones, whereas fine-grained soils produce darker tones. A change in vegetative pattern may indicate a change in kind or texture of soil or rock.

Since landforms are the result of geologic processes, their identification may give some indication of geologic structure as well as of soil and rock materials. Drumlins, eskers, outwash and alluvial fans, talus cones, landslides, slumps, sinkholes, and abrupt changes in slope are some of the landforms that can be recognized.

Drainage patterns may be indicative of surface materials, topography, and geologic structure. A radial pattern in which streams flow outward from a center indicates an uplifted dome or a volcanic cone. A dendritic or treelike pattern typically develops on horizontally bedded rock. A parallel pattern implies a uniform slope such as a coastal plain. A rectangular or lattice pattern characterized by right-angle bends in both the main stream and its tributaries indicates structural control from joints or faults. A trellis pattern, also characterized by right-angle bends and junctions but more regular than a rectangular pattern and having main streams and their larger tributaries parallel, is also due to structural control and is typical of steeply dipping or tightly

folded sediments. An annular or ringlike pattern is due to rock structure and is usually associated with maturely dissected dome or basin structures.

In addition, local interruption or modification of drainage, such as a stream pushed to one side of the valley, overfalls, swampy conditions, incised meanders, braided streams, and oxbow lakes and abandoned or buried channels, may be helpful in interpreting the conditions at the site.

Delineate any features of tone, vegetation, landform, and drainage on the aerial photographs or on overlays for subsequent checking in the field.

Field Study

A field study of the site and the surrounding area should include a traverse of the valley for about a mile above and a mile below the site. It should include a study of slopes, tributary valleys, landslides, springs and seeps, sinkholes, exposed rock sections, and the nature of unconsolidated overburden to obtain information on the general geology of the area. An inspection of upland and valley slopes may provide clues to the thickness and sequence of formations and to rock structure. The field study should also include inspections of the shape and character of channels and the nature of residual, colluvial, alluvial, fan, slide, and other kinds of deposits. Any observations of ground-water occurrence, especially in alluvial deposits, should be recorded. Possible sources and approximate amounts of borrow material should be noted. A few hand-auger borings or test pits may be needed.

The geologist should make a thorough inspection of the dam and reservoir area. He should identify and describe all geologic formations visible at the surface and note their topographic positions. He should determine the local dip and strike of the formations and note any stratigraphic relationships or structural features that may lead to problems of seepage, excessive water loss, and sliding of the embankment.

He should locate and delineate any faults. If they are numerous, active, or of large displacement, it may be necessary to relocate the dam or the principal spillway. In addition to other problems, faults and fault zones may cause serious leakage.

Hand-auger borings or test pits may be needed for some preliminary exploration at the dam site. If power tools are available, they should be used if conditions warrant. If there are geologic conditions that indicate that the site may not be feasible, they should be thoroughly investigated immediately.

Depth to ground water, depth to bedrock, thickness of recent alluvium and colluvium, and availability of suitable borrow material are conditions that may require further definition.

Mapping

It is always advisable to prepare a geologic map of the site. Use the best available base map or aerial photograph. Plane-table surveys may be needed. Features to be shown on the map include --

1. Areal geology of all surface formations, including delineation of unconsolidated deposits.
2. Texture of surficial deposits.
3. Structure of bedrock, including dip and strike, faults or fractures, stratification, porosity and permeability, schistosity, and weathered zones.
4. Ground-water features, including seeps, springs, observable water tables, and drainage.
5. Areas of modern deposits (result of accelerated erosion).
6. Unstable slopes, slips, and landslides.

Report of Preliminary Investigation

Prepare a report of the preliminary geologic investigation and make recommendations on the need for further investigation.

Form SCS-375, Preliminary Geologic Examination of Dam Sites, may be used. Use form SCS-533, Log of Test Holes, to record information obtained from any power drilling, test pits, or hand augering. Send one copy of both forms to the EWP Unit engineering geologist. This information is useful in planning a detailed subsurface investigation if one is necessary. Since form SCS-375 is for in-Service use only, its distribution should be restricted to SCS personnel.

In some situations the preliminary site investigation and knowledge and experience in the area provide enough information for design purposes without further detailed investigation. Thus for small structures in areas where site conditions are not complex and where there is little variation in conditions or materials from one site to the next, previous investigations in the general area may be applicable. For these sites prepare forms SCS-35A, - 35B, and -35C from the hand-auger data and submit them with the report. If samples from other sites with similar conditions have been analyzed and the data are used as criteria in preparing the recommendations, include in the report a reference to these samples and note the availability of the data.

For those sites where previous information permits a preliminary investigation to be used for design, it is necessary to locate and delineate borrow areas. This can be done only by subsurface exploration. A detailed investigation must be made of all borrow areas.

CHAPTER 7. DETAILED SITE INVESTIGATION

CONTENTS

	Page
Contracting for geologic investigations of dam sites	7-2
Preparation for subsurface exploration	7-2
Assembling maps, reports, and basic data	7-2
Necessary authorization	7-3
Preparation of site	7-3
Staking and clearing	7-3
Subsurface exploration. Phase 1: Geologic correlation and interpretation	7-3
Purpose and objectives	7-3
Numbering test holes	7-4
Determining location and depth of proposed test holes	7-4
Subsurface exploration. Phase 2: Obtaining samples	7-11
Purpose and objectives	7-11
Numbering and locating sample holes	7-11
Investigation of ground water	7-12
Purpose and objectives	7-12
Procedure	7-12
Report of detailed geologic investigation	7-13
Narrative report	7-13
Report supplement for in-Service use only	7-16
Distribution of geologic report	7-16

TABLES

Tables

7-1 Approximate vertical-stress values of earthfill structures weighing 100 pounds per cubic foot	7-7
7-2 Presumptive bearing values (approximate maximum safe-load values) of soils as related to the Unified soil classification system	7-8

CHAPTER 7. DETAILED SITE INVESTIGATION

A detailed site investigation provides information on subsurface conditions that cannot be obtained by surface examination or by shallow subsurface investigation in which readily portable tools such as hand shovels and hand augers are used. Usually, detailed subsurface investigations require equipment such as backhoes, dozers, power augers, or core drills.

Detailed site investigations are required if information about the geology of the area is not adequate or if the results of the preliminary geologic examination are not sufficiently conclusive to positively establish that:

1. Knowledge of the foundation materials and conditions to a depth at least equal to the height of the proposed structure is of sufficient scope and quality to serve as a basis for geologic interpretation and structural design.
2. Fill materials of suitable quality are available in sufficient quantity.
3. The reservoir basin of storage reservoirs is free from sinks, permeable strata, and fractures or fissures that might lead to moderate or rapid water loss.
4. Subsurface water conditions that might materially affect the design of the structure or the construction operations are known.
5. Stability characteristics of material in the emergency or other open spillways and channels under anticipated flow conditions during operation of the structure are known.
6. The probable rate of sedimentation of the reservoir will not encroach upon the usable storage capacity in a period of years less than the designed life expectancy of the structure.

Detailed subsurface investigations must be of sufficient intensity to determine all the conditions or factors that may influence the design, construction, or functioning of the structure.

Subsurface investigations of dam sites are made after the surface geology has been studied. The nature and intensity of underground exploratory work for a particular type and purpose of structure are conditioned by this earlier examination of the area. As subsurface work progresses, the findings may further modify the intensity of investigation needed. Other conditions being equal, the intensity of investigation depends on the complexity of the site.

It is desirable for the operations geologist to inspect dam sites during construction to get a better understanding of construction procedures, to observe subsurface conditions that are exposed, and to confer with the engineer on any problems involving geology that develop.

Detailed subsurface investigations can be carried out under contract with local companies or by SCS personnel using SCS-owned equipment.

Contracting for Geologic Investigations of Dam Sites

In those States where the annual workload is not large enough to justify the purchase of drilling equipment, drilling services must be obtained for subsurface investigations by arrangement with other States or by contracting with private companies. These services may be obtained by (1) equipment-rental contract or (2) inclusion in a negotiated engineering contract for professional services (see Engineering Memorandum SCS-36). If an equipment-rental contract is let, logging and classifying materials, developing interpretations, and preparing the reports are the responsibility of SCS personnel. In a negotiated engineering contract for geologic investigations, the contractor is required to provide and operate exploration equipment, to log and classify the materials, and to prepare the geologic report. A negotiated engineering contract can be let solely for geologic investigations including analysis and reports, or these investigations can be included in an overall contract that also includes laboratory analysis and development of the final design.

Minimum requirements and technical standards for SCS work are the same for contracted work as for work done with SCS owned and operated equipment.

Preparation for Subsurface Exploration

Assembling Maps, Reports, and Basic Data

Available geologic information may indicate the intensity of investigation needed. Review the data collected during the preliminary geologic examination and the report of that examination in detail. This study may indicate the extent to which additional information and data are needed. The sources of information suggested under Assembly of Data in chapter 6 may furnish more data on problems that may be present.

Before the field work is started, the engineering-survey information and any available preliminary design data should be plotted on forms SCS-35A, -35B, and -35C so that the geologist can locate and log the test holes and correlate between them.

The preliminary plan of the proposed structure, including the centerline of the dam and the proposed centerline of the principal outlet structure and emergency spillway, the present stream channel, and a map of the proposed borrow area(s) containing grids or traverse reference are prepared on form SCS-35A. Cross sections of the borrow area are to be drawn on this sheet as the investigation proceeds.

The profiles of the proposed centerline of the dam and the principal spillway are prepared on form SCS-35B. If cross sections of the stream channel are needed, they are to be plotted on this sheet as the investigation proceeds.

Form SCS-35C includes the proposed centerline of the emergency spillway and provides space for the cross sections of the emergency spillway that

are developed during the course of the investigation. If needed, form SCS-315 may be used for additional profiles and cross sections, such as the profile in the downstream part of the dam if borings are needed for toe drains or relief wells.

Necessary Authorizations

It is essential always to obtain the landowner's permission to enter, cross, and exit from his land or property. Permission is also required if property is to be removed (temporarily or permanently), displaced, or rearranged. Permission is required for construction of roads, sumps, ditches, or ramps; for use and discharge of water belonging to the property owner; for construction of exploratory trenches, auger holes, drill holes, and test pits; and for stream displacement or obstruction. The necessary clearance is to be obtained by the Work Unit Conservationist.

Preparation of Site

If the activities of the survey crew and the investigation party are well coordinated, the dam and reservoir areas should be mapped, staked, and adequately cleared before equipment for subsurface investigation arrives.

Staking and Clearing

Locations of the centerline of the dam, centerline of the principal spillway, and cross sections of the emergency spillway should be staked. In many cases it is desirable to survey and stake an alternate location for the principal spillway. In areas of tall grass or weeds, lath and flagging should be used to locate the stakes.

All grid lines in the borrow area, emergency-spillway cross sections, centerline of the principal spillway, and centerline of the dam should be cleared to a width sufficient to provide easy access for the drilling equipment. If a stream crossing must be provided, it may have to be located upstream from the reservoir to avoid modifying the ground-water conditions at the site.

Subsurface Exploration
Phase 1: Geologic Correlation and Interpretation

Purpose and Objectives

The purpose of phase 1 of the detailed subsurface investigation is to identify, delineate, and correlate the underlying materials; to locate, identify, and interpret geologic features; to determine ground-water conditions; to interpret, to the extent possible by field tests, the engineering properties of the materials; and to determine what materials need to be sampled for soil mechanics tests.

Split-tube or thin-wall drive samplers are recommended for exploratory boring. For accurate logging of unconsolidated thin-bedded and highly variable materials, thin-wall or split-tube drive samplers must be used. Thin-wall drive samplers can be used for this purpose only if the drilling rig is equipped with a suitable device for extruding samples.

The number, distribution, and size of test holes and the number of samples needed to establish subsurface conditions vary widely from one investigation to another, depending on the variety and complexity of the conditions. Enough test holes of adequate depth must be bored for the geologist to identify, delineate, and correlate the underlying strata and for the engineer and the geologist to determine the kinds and locations of samples needed. Where experience or previous examination indicates that only shallow test holes are needed, the excavation of open pits with hand tools or dozers and backhoes may be adequate. Where there are numerous cobbles and boulders, backhoe or dozer pits may be the most practical method of exploration. Where pits and trenches in the foundation area cannot be left open, record their location and extent accurately and show them on the plan so that, if necessary, they can be reopened and properly sloped and backfilled during construction.

Numbering Test Holes

Use the following standard system of numbering test holes.

Location	Hole Nos.
Centerline of dam	1-99
Borrow area	101-199
Emergency spillway	201-299
Centerline of principal spillway	301-399
Stream channel	401-499
Relief wells	501-599
Other	601-699
Other	701-799, etc.

Principal-spillway, channel, and emergency-spillway holes that are on the centerline of the dam should be given principal-spillway, channel, and emergency-spillway Nos. rather than centerline-of-dam Nos. Number foundation holes in the area of the base of the dam but not in the immediate vicinity of the centerline of the dam or appurtenances as "other."

Determining Location and Depth of Proposed Test Holes

Make exploratory borings along the centerline of the dam, along the centerline of the outlet structure, in the spillway area, and in the borrow area or areas. Additional exploratory borings will be needed if relief wells or foundation drains are required or if special information is needed because of site conditions.

Foundation test holes.--Centerline investigations must determine whether there is stable support for the dam; whether all strata have enough strength to prevent crushing, excessive consolidation, or plastic flow; and whether water movement through the foundation or abutments will cause piping, detrimental uplift pressure, or excessive water loss.

Conditions that must be recognized and located include nature, extent, and sequence of strata; highly dispersed soils; soluble salts; aquifers; and any weak bedding planes, joints, faults, or other structural weaknesses in the underlying formations.

The spacing and number of test holes needed along the centerline of the dam or beneath the proposed base depend principally on the complexity of the geology. Some of the more important factors are character and continuity of the beds, attitude of the strata, and presence or absence of joints or faults. Depth, thickness, sequence, extent, and continuity of the different materials must be determined.

A convenient system of boring to determine site conditions is to locate one test hole on the flood plain near each abutment and one on the centerline of the outlet structure. Between these holes additional holes may then be located as needed to establish good correlation of strata. At least one hole should be put in each abandoned stream channel that crosses the centerline. At least one hole is usually required in each abutment unless a good surface exposure is available. It is highly important that enough investigation be carried out to establish continuity of strata, or the lack thereof, throughout the area underlying the base of the proposed dam.

In addition to the minimum requirements for depth of exploration set forth in chapter 5, the following criteria apply to foundation investigations.

Investigations must proceed to a depth of not less than the height of the dam unless unweathered rock is encountered. For this purpose rock is interpreted as indurated, virtually incompressible material that is not underlain at least for a depth equal to the height of the dam by unstable, compressible materials. Usually rock includes shale and siltstone. Experience and knowledge of the general stratigraphy of the area may provide information on the thickness of these rock formations. The lack of positive information about the formations makes it necessary to drill an exploratory hole to the "minimum" depth specified, as if the formation were unconsolidated material.

Where compressible material extends to a depth equal to the maximum height of the dam, it may be necessary to extend exploration to a much greater depth. Depth of exploration depends on the character of material and on the combined pressure exerted by overburden and embankment. Tables 7-1 and 7-2 will help the engineering geologist to make this decision. Table 7-1 shows the approximate loading values of earthfill structures of various heights of fill at various depths. For example, a dam 50 feet high exerts a downward pressure of about 1.9 tons per square foot at a depth of 50 feet directly below the centerline of the dam. This is only an approximate value because load varies with density of the fill material, shape and rigidity of the dam, and strength of the foundation material above the point of measurement.

Table 7-2 shows the presumptive bearing values of various unconfined materials for different consistencies and relative densities. These values are the approximate loads to which these various soil materials can safely be subjected without excessive settlement. This is somewhat ambiguous because a given amount of settlement per unit thickness may be of minor significance for a thin layer but excessive for a thick stratum.

The estimate of consistency and relative density must be made from examination of representative samples, blow count, drilling characteristics, or an estimate of the dry density and void ratio of the material.

An example of how to use tables 7-1 and 7-2 follows. The foundation for a dam 50 feet high has been drilled to the minimum depth of 50 feet, and the bottom of the bore hole is still in compressible materials. The approximate vertical stress at this depth from a 50-foot dam is 1.9 tons per square foot (table 7-1). The material at the bottom of the hole is a stiff inorganic plastic clay (CH). Table 7-2 shows that stiff CH has a presumptive bearing value of 1.5 tons per square foot. This indicates that the formation is subject to deformation under the proposed load and that exploration must continue to a greater depth until the vertical stress is equal to or less than the safe load value (in this example at a depth of 85 feet).

Since these are approximate values, use them only as guides for increasing the minimum depth of exploration. Do not use them for design. Never use the tables as justification for terminating exploration at a depth of less than the minimum set forth in chapter 5.

Principal-spillway test holes.--Complete information on the strata underlying the outlet structure is needed to design the outlet structure. It is necessary to determine if there is likely to be appreciable differential settlement that may result in cracking. If the outlet conduit is to be located on or near rock with an irregular surface, the profile of the rock surface must be accurately defined. The number of test holes needed for this purpose depends on the configuration of the rock. If the rock surface is undulating, numerous test holes may be required so that the needed depth of cradle and the treatment of the foundation can be determined. In addition to the test hole at the intersection of the centerline of the dam and other holes needed to determine the configuration of rock, test holes are needed at the proposed riser location, at the downstream toe of the dam, and at the downstream end of the outlet conduit. For other types of outlets exploration requirements vary widely from site to site, but boring must be adequate to permit the design of structures that are safe insofar as bearing and sliding are concerned.

The minimum depth of holes along the centerline of the outlet is to be equal to the height of the proposed fill over the outlet conduit at the location of boring or 12 feet, whichever is greater, unless unweathered rock is encountered. The minimum depth of holes below the riser is to be equal to the difference in elevation between the top of the riser and the natural ground line or 12 feet, whichever is greater.

Emergency-spillway test holes.--It is necessary to determine the stability and erodibility of spillway material and to provide adequate information on the extent and volume of the various types of material to be excavated and on the suitability of the excavated material for use in construction. A series of geologic cross sections at right angles to the centerline of the spillway should be developed if conditions are highly variable or if long spillway sections are planned.

Table 7-1.--Approximate vertical-stress values of earthfill structures weighing 100 pounds per cubic foot[1]

Height of dam (feet)	Depth (feet)																								
	5	10	15	20	25	30	35	40	45	50	55	60	65	70	75	80	85	90	95	100	110	120	130	140	150
	Tons per square foot																								
5	0.2	0.1	0.1	0.1	0.1																				
10	0.5	0.4	0.3	0.3	0.2	0.2																			
15	0.7	0.6	0.6	0.5	0.5	0.4	0.4	0.4	0.3																
20	1.0	0.9	0.8	0.8	0.7	0.7	0.6	0.6	0.5	0.5	0.5	0.4													
25		1.2	1.1	1.1	1.0	0.9	0.9	0.8	0.8	0.7	0.7	0.6	0.6	0.6	0.6										
30			1.4	1.3	1.2	1.1	1.1	1.0	1.0	0.9	0.9	0.8	0.8	0.8	0.7	0.7	0.7	0.6							
35					1.5	1.4	1.3	1.3	1.2	1.2	1.1	1.1	1.0	1.0	0.9	0.9	0.9	0.8	0.8	0.8	0.7				
40					1.7	1.7	1.6	1.5	1.5	1.4	1.4	1.3	1.3	1.2	1.2	1.1	1.1	1.0	1.0	1.0	0.9	0.9	0.8	0.8	
45					2.0	1.9	1.9	1.8	1.7	1.7	1.6	1.5	1.5	1.4	1.4	1.3	1.3	1.3	1.2	1.2	1.1	1.1	1.0	0.9	0.9
50						2.2	2.1	2.0	2.0	1.9	1.8	1.8	1.7	1.7	1.6	1.6	1.5	1.5	1.4	1.4	1.4	1.3	1.3	1.2	1.2
55							2.4	2.3	2.2	2.2	2.1	2.0	2.0	1.9	1.9	1.8	1.8	1.7	1.6	1.6	1.5	1.5	1.4	1.3	1.3
60								2.6	2.5	2.4	2.4	2.3	2.2	2.2	2.1	2.0	2.0	2.0	1.9	1.9	1.8	1.7	1.6	1.5	1.5
65									2.8	2.7	2.6	2.5	2.5	2.4	2.4	2.4	2.3	2.2	2.2	2.1	2.1	2.0	1.9	1.7	1.7
70									3.0	2.9	2.9	2.8	2.7	2.7	2.6	2.6	2.6	2.5	2.4	2.3	2.3	2.2	2.1	2.0	1.9
75										3.2	3.1	3.1	3.0	2.9	2.9	2.9	2.8	2.7	2.7	2.6	2.6	2.5	2.4	2.2	2.1
80											3.4	3.3	3.2	3.2	3.1	3.1	3.1	3.0	2.9	2.9	2.8	2.7	2.6	2.4	2.3
85												3.6	3.5	3.4	3.4	3.4	3.3	3.2	3.1	3.1	3.0	2.8	2.7	2.6	2.6
90												3.9	3.8	3.7	3.6	3.6	3.6	3.4	3.3	3.3	3.2	3.1	3.0	2.9	2.8
95													4.0	4.0	3.9	3.9	3.8	3.7	3.6	3.6	3.4	3.3	3.2	3.1	3.0
100													4.3	4.2	4.2	4.2	4.1	3.9	3.8	3.8	3.7	3.6	3.5	3.4	3.3

[1] Do not use for design purposes.

Table 7-2.--Presumptive bearing values (approximate maximum safe-load values) of soils as related to the Unified soil classification system

Noncohesive materials

Relative density[1]	GW	GP	SW	SP	GM	GC	SM	ML
			Tons per square foot					
Very loose.	--	--	0.50	0.50	0.25	0.25	< 0.25	--
Loose.....	1.75	1.75	1.00	1.00	.50	1.25	.75	0.25
Medium or firm.	3.50	3.25	2.25	2.00	1.40	2.40	1.75	1.00
Dense or compact.	5.25	5.00	3.75	2.25	2.80	3.50	2.50	1.75
Very dense or very compact.	6.00	5.75	4.50	3.25	3.50	6.25	3.00	2.00

Cohesive materials

Consistency[1]	SM	SC	ML	CL	OL	MH	CH	OH
			Tons per square foot					
Very soft..	0.25	0.25	--	0.25	--	--	--	--
Soft.....	.50	.50	0.25	.50	--	0.25	0.25	--
Medium.....	.75	1.00	.75	1.00	0.25	1.00	1.00	0.25
Stiff.....	1.50	2.25	1.75	2.25	1.00	2.25	1.50	1.00
Very stiff.	2.00	2.75	2.00	2.75	1.50	2.75	1.75	1.25
Hard.....	2.50	3.25	2.50	3.25	2.00	3.25	2.25	1.50

[1] Relative density and consistency as related to standard penetration test (table 2-1).

Initially, one cross section should be located approximately at the control section, one in the outlet section, and one in the inlet section of the spillway. Additional cross sections can then be located as needed for correlation, to locate contacts, or to obtain additional needed data. On each cross section, test holes should be located at the centerline and at the sides of the spillway. Where deep spillway cuts are planned, additional test holes may be needed to determine the character of the material in the sides of the cut. Where there is consolidated rock, it is important to carefully delineate the rock surface. The number of additional cross sections or test holes that may be needed for this purpose depends on the configuration of the rock. Each boring for emergency-spillway investigations must extend to a depth of not less than 2 feet below the bottom of the proposed emergency spillway.

Investigations for rock excavation must be of sufficient detail that the estimate of quantity is no more than 25 percent in error. Boring must extend to a depth of at least 2 feet below the level to which excavation is planned. This usually requires drilling equipment even where delineation of the rock surface has been accomplished by using a bulldozer or backhoe. Carefully log and describe the material to be excavated. Give special attention to such structural features as thickness of beds; attitude, character, and condition of bedding planes; joint systems and attitude and condition of joint planes; schistosity; cleavage; flow banding; and cavities and solution channels as well as to strength (chapter 1) and degree and kind of cementation. These factors influence the method and hence the cost of excavation. Under some combinations of these conditions rock can be ripped and removed, other combinations may require special equipment, and still others blasting.

Borrow-area test holes.--The proposed borrow area is investigated to identify and classify the materials according to their availability and suitability for use in constructing the dam. From these investigations the location and quantities of desirable materials and the areas in which borrow pits may be most conveniently developed can be determined. The location and approximate extent of any undesirable materials must be determined. Depth to ground water, if reached, must be recorded.

The initial location of test holes in the borrow area should be according to some systematic plan, such as intersections of a grid system, so that the area is adequately covered by a minimum number of holes. Additional holes can then be located where they are needed to establish subsurface conditions. All borings should extend at least 2 feet below the expected depth of removal of material unless consolidated material that is not suitable for use is encountered.

Usually about 12 borrow-area test holes will suffice for all but the larger structures, but local topography, geology, and ground-water conditions may require great variation in the intensity of this study.

Reservoir-basin test holes.--Local geologic conditions may require subsurface exploratory work in the general area of the site and reservoir.

The location, number, and depth of these test holes depends on the specific problem to be solved. If the presence of cavernous or permeable strata that may adversely influence the functioning or stability of the structure is suspected, it is necessary to put down enough test holes to determine these conditions in order to develop appropriate safeguards.

Foundation-drain and relief-well test holes.--If exploration along the centerline of the proposed dam shows the presence of permeable materials, consideration should be given to the possible need for foundation drains, relief wells, or both.

Relief wells are usually located at or near the downstream toe of a dam. Foundation drains may be located anywhere between the centerline and the downstream toe, depending on the specific problems and conditions. Either foundation-drainage method, or both, may be necessary to control uplift pressure, to facilitate consolidation, or to prevent piping. In many cases deep foundation drains, consisting of trenches backfilled with properly designed filter materials can be used as an economical alternate for relief wells. This method is suited to many stratified or lenticular materials and to those situations where confined aquifers can be tapped feasibly by excavation.

The design engineer is responsible for determining the kind and location of drainage system to be used. The geologist must recognize the problem, however, and anticipate possible solutions in order to get sufficient information for design.

Exploration must be carried downstream from the centerline to determine the extent and continuity of permeable substrata where foundation drains may be needed. A series of accurately logged borings in the vicinity of the downstream toe, together with centerline information, usually provides enough data for design of the drainage system. Where foundation conditions are highly variable, additional test holes may be needed between the centerline and the downstream toe.

Stream-channel test holes.--If the stream channel contains boulders, roots, debris, and organic matter that cause poor foundation conditions, it may be necessary to remove these materials from beneath the dam as "special stream-channel excavation." Usually, excavation is required from the upstream toe of the dam to a point two-thirds of the distance from the centerline to the downstream toe to prevent leakage through the foundation. Channel investigations provide information on the depth, nature, quantity, and location of the deposits that are to be removed. Sufficient exploration should be made to determine this. If possible, one test hole should be located in the bottom of the channel. Space test holes in stream channels so that the volume of material to be excavated can be estimated closely.

The stream channel may be the best local source of sand or gravel for use in foundation drains, filter blankets, and roadways. The geologist should carefully log and sample these materials, and if they seem to be suitable for these purposes, indicate the need for washing and screening.

Other investigations.--Test holes may be needed at other locations in the general site area. It may be necessary to determine the continuity of materials upstream and downstream throughout the foundation and reservoir area. Information on the depth, nature, quantity, location, and extent of undesirable deposits such as organic soils, very soft silts and clays, and boulders within the foundation area may be needed. Structural features such as faults and contacts may have to be accurately located and their attitude determined through the site area. There may be geologic conditions that require additional subsurface exploration in order to adequately evaluate their effect on the design, construction, and operation of the proposed structure.

Subsurface Exploration. Phase 2: Obtaining Samples

Purpose and Objectives

Some types of samplers used for logging in phase 1 furnish small disturbed samples that are adequate for laboratory testing; others do not. The purpose of phase 2 of the detailed subsurface investigation is to obtain the necessary undisturbed samples and the larger or additional small disturbed samples of unconsolidated materials that are required for soil mechanics testing and analysis.

In phase 1 test holes were bored and logged and various field tests carried out. These data were analyzed and interpreted geologically, and geologic profiles and cross sections were prepared. From a study of these profiles and cross sections and the results of field tests the engineer and the geologist determined what horizons should be sampled and the type, size, and number of samples needed.

The minimum requirements for sampling are outlined by group classification in chapter 5. Sample requirements based on the character of materials and on the tests desired are given in chapter 3. Sampling methods and equipment depend on the character and condition of the material and on the type and size of sample needed (chapter 2).

Holes bored to get undisturbed samples of unconsolidated materials are usually of a larger diameter than those bored for logging. For some situations a different drilling rig from that used in phase 1 must be used or this phase of the investigation must be done by contract, even though SCS-owned equipment was used for logging. The objective is to select locations for these holes so that the required number, size, and type of samples can be obtained with a minimum amount of boring.

Numbering and Locating Sample Holes

Locate sample holes adjacent to the test holes that were bored and logged in phase 1. In this way the depth at which the sample is to be taken can be determined accurately to insure that it represents the selected horizon.

These holes are not logged, and they are given the same Nos. as the logged holes to which they are adjacent. They are not plotted separately

on the plans and profiles, but the symbol for the like-numbered logged holes on the plan is changed from a dot to a circled dot and the sampled segment is delineated on the graphic log.

Investigation of Ground Water

Ground-water conditions may influence the design, construction, and operation of a dam. Where the surface of the underground water (water table) is at or near the ground surface, special design features may be needed to insure stability. In addition special construction procedures may be needed. This condition may eliminate some areas from consideration as a source of borrow material. Where the water table is very low, getting adequate supplies of water to use in construction may be a problem. Artesian water (ground water under enough pressure to rise above the level at which it is reached in a well) may also create special problems.

Impounding water, even temporarily, may modify ground-water conditions. New springs may be created, the flow of springs within the reservoir area may be reversed and they may emerge at a new location, and unsaturated rock or soil materials may become saturated. Other changes in the location and movement of underground water may occur. Frequently, such effects of the structure must be considered before its construction.

Purpose and Objective

The purpose of ground-water studies in dam-site investigations is twofold: (1) To determine present ground-water conditions that may affect the design, construction, and operation of the proposed structure; (2) to determine and evaluate the geologic conditions that may influence the effect of impoundage on ground water.

The objective is to furnish the engineer (1) an analysis of ground-water conditions and (2) an interpretation of the geologic conditions that may influence the effect of impoundage on the location and movement of underground water. This enables him to give due consideration to these problems in planning and in the design and construction of the structure.

Procedure

Examine springs and seeps in the vicinity of the structural site and reservoir area and record their elevation. Where necessary for analysis, prepare a map that shows the location and elevation of springs and seeps. Record any information on source of the water, volume of flow, whether flow is perennial or seasonal, and location of the recharge area. For all test holes that extend below the water table record the elevation of the water table and plot it on the geologic cross sections and profiles. If necessary, prepare a water-table contour map. Record any information on seasonal fluctuation of the water table and note the source of this information. Wait 1 day or longer after drilling to measure the water level in test holes to allow time for stabilization of the water level. Log all artesian aquifers and record any information on the hydrostatic-pressure level and volume of flow. Draw a contour map of the piezometric surface if it is needed.

Locate any permeable materials in the foundation, abutment, and reservoir areas and determine their thickness, elevation, and continuity. Where permeability is a critical factor, obtain values for the coefficient of permeability either by field tests or by laboratory tests on undisturbed samples.

The following field tests are helpful in ground-water investigations.

1. Use of indicators to trace ground-water flow. Water-soluble organic dyes such as sodium fluorescein have been used successfully in many instances.
2. Pressure tests to locate permeable horizons.
3. Pumping-in tests to determine the value of the coefficient of permeability.
4. Use of piezometers.
5. Pumping-out tests.

If local sources of water are adequate for construction purposes but there is some question about the quality of the water, take samples for chemical analysis.

Report of Detailed Geologic Investigation

Narrative Report

In reporting the geologic conditions of a structural site, be as brief and concise as possible but describe all geologic problems thoroughly. Prepare the report in narrative form or use the standard reporting forms, SCS-376A and SCS-376B.

The report must set forth clearly the methods of investigation and the information obtained. Include copies of all field logs in the report.

Prepare a supplement to the report that contains interpretations and conclusions and label it "For In-Service Use Only." This supplement can be prepared on form SCS-376C. Copies of completed plan and profile sheets for geologic investigations must accompany the report supplement.

The following outline can be used in preparing the narrative report.

I. Introduction.
   A. General.
      1. Date of exploration.
      2. Personnel engaged in exploration.
      3. Watershed (name and location).
      4. Site No.
      5. Site group and structure class.
      6. Location.
      7. Equipment used (type, size, makes, models, etc.).
      8. Site data.
         a. Size of drainage area above site (square miles and acres).
         b. Maximum pool depth.

(1) Sediment pool.
(2) Flood pool.
(3) Other pools.

c. Dam.
(1) Maximum height.
(2) Length.
(3) Location of spillway.
(4) Volume of fill.

9. Special methods used.

B. Surface geology and physiography.
1. Physiographic area.
2. Topography.
a. Steepness of valley slopes.
b. Width of flood plain.
3. Geologic formations and surficial deposits.
a. Names and ages (e.g., Jordan member, Trempealeau formation, Cambrian age; Illinoian till; Recent alluvium).
b. Description.
c. Topographic position.
4. Structure.
a. Regional and local dip and strike.
b. Faults, joints, unconformities, etc.
5. Evidence of landslides, seepage, springs, etc.
6. Sediment and erosion.
a. Gross erosion, present and future, by source.
b. Delivery rates.
c. Sediment yield.
d. Storage requirements and distribution.
7. Downstream-channel stability.
a. Present channel conditions.
b. Anticipated effect of the proposed structure.

II. Subsurface geology.
A. Embankment foundation.
1. Location and types of test holes and number of samples of each type collected.
2. Depth, thickness, and description of pervious or low-volume-weight strata. Give detailed data on aquifers or water-bearing zones.
3. Depth and description of firm foundation materials.
4. Location, depth, thickness, and description of any questionable materials.
5. Description of abutment materials, including depth and thickness of pervious layers or aquifers.
6. Location, attitude, pattern, and other pertinent data on any geologic structural features such as joints, bedding planes, faults, and schistosity.
7. Location of water table and estimated rate of recharge (high, medium, low).
8. Permeability of abutments.

B. Centerline of outlet structure.
1. Location and type of test holes and number of samples of each type collected.

2. Depth, thickness, and description of pervious or low-volume-weight strata.
3. Depth and description of firm foundation materials.
4. Location, depth, thickness, and description of any questionable materials.
5. Location, attitude, pattern, and other pertinent data on any geologic structural features such as joints, bedding planes, faults, and schistosity.
6. Location of water table and estimated rate of recharge (high, medium, low).

C. Emergency or other open spillway.
1. Location and types of test holes and number of samples of each type collected.
2. Location, depth, thickness, and description of materials encountered, including
   a. Hard rock or unconsolidated material to be removed and estimated volume of each.
   b. Material at base of excavation.
   c. Any questionable material.

D. Borrow area(s).
1. Location of test holes and number and type of samples collected.
2. Location, depth, thickness, description, and estimated quantities of various types of material.

E. Relief-well and foundation-drain explorations.
1. Location of test holes and number and type of samples collected.
2. Description of materials, including location, depth, thickness, and description of pervious strata.

F. Other explorations.
1. Purpose.
2. Location of test holes and number and types of samples collected.
3. Description of materials.

G. Water supply.
1. Available sources (farm ponds, rivers, wells, municipal, etc.) and quantity.
2. Quality of available water. If questionable, what samples were taken for analysis.

H. Construction materials (other than earthfill).
1. Sources of materials for concrete aggregate, riprap, impervious blanket, wells, and drains.
2. Description, location, and estimated quantities of materials available.

III. Logs.
Attach completed copies of form SCS-533.

IV. Interpretations and conclusions (for in-Service use).

A. Interpretations.
1. Interpretations of geologic conditions at the site.
2. Possible relation of conditions to design, construction, and operation of structure.

B. Conclusions.
Geologic conditions that require special consideration in design and construction.

C. Attach completed copies of forms SCS-35A, -35B, and -35C.

Report Supplement for In-Service Use Only

Record only basic data and facts in the geologic report. On request, this report is made available for inspection by non-SCS interests. Report separately interpretations, conclusions, and suggestions and label this supplementary report "For in-Service use only" to restrict its use.

From the surface geology and the facts obtained by underground exploration the geologist should interpret geologic conditions at the site and their possible relation to the suitability of the site and to the design, construction, and operation of the proposed structure. Specifically, he should point out any problems likely to result from the geologic conditions, such as foundation weakness, seepage problems, excess ground water during construction, difficulties of excavation, spillway problems, or problems concerning available borrow materials.

The geologist should make recommendations on possible means and methods of overcoming problems that result from the geologic conditions. He should indicate the most efficient use of available materials and of the geologic features of the site. His recommendations might include suggestions to the design engineer on such items as location of the principal spillway, location of the emergency spillway, depth of core trench, and depth of keyways into abutments. He should indicate the need for an impervious blanket, grouting, or other control of excessive water loss. He should point out any special problems that may arise during construction of the dam such as problems of excavation and suitability of the excavated rock for use as riprap, sources of concrete aggregate, and recommendations on sources of water for construction.

Distribution of Geologic Report

Send copies of the geologic report and supplement, including the field logs and completed "Plan and Profiles for Geologic Investigation," to:

1. The EWP Unit geologist for all sites for structures requiring EWP Unit review or approval of the engineering plans.
2. The soil mechanics laboratory to which samples are sent.
3. A copy must accompany the design data, and additional copies are to be distributed as directed by the State Conservationist.

SELECTED REFERENCES

General

Eardley, A. J., 1942, Aerial Photographs: Their Use and Interpretation, New York, Harper and Brothers.

Emmons, W. H., et al, 1955, Geology: Principles and Processes, 4th ed., New York, McGraw-Hill Book Co., Inc.

Glossary of Geology and Related Sciences, 1960, 2nd ed., Washington, D. C., Am. Geol. Inst.

Grim, R. E., 1953, Clay Mineralogy, New York, McGraw-Hill Book Co., Inc.

Lahee, F. H., 1961, Field Geology, 6th ed., New York, McGraw-Hill Book Co., Inc.

Leet, L. D. and Sheldon Judson, 1958, Physical Geology, 2nd ed., Englewood Cliffs, N. J., Prentice-Hall, Inc.

Miller, V. C., 1961, Photogeology, New York, McGraw-Hill Book Co., Inc.

Pettijohn, F. J., 1957, Sedimentary Rocks, 2nd ed., New York, Harper & Bros.

Ray, R. G., 1960, Aerial Photographs in Geologic Interpretation and Mapping, U. S. Geol. Survey Prof. Paper 373.

Strahler, A. N., 1963, The Earth Sciences, New York, Harper & Row.

Wentworth, C. K., 1952, A Scale of Grade and Class Terms for Clastic Sediments, Jour. Geology, v. 30.

Engineering Geology

Howell, B. F., Jr., 1959, Introduction to Geophysics, New York, McGraw-Hill Book Co., Inc.

Hvorslev, M. J., 1949, Subsurface Exploration and Sampling of Soils for Civil Engineering Purposes, Am. Soc. Civil Engrs., Vicksburg, Miss., Waterways Experiment Station.

Krumbein, W. C. and L. L. Sloss, 1963, Stratigraphy and Sedimentation, 2nd ed., San Francisco, W. H. Freeman & Co.

Krynine, D. P. and W. R. Judd, 1957, Principles of Engineering Geology and Geotechnics, New York, McGraw-Hill Book Co., Inc.

Leggett, R. F., 1962, Geology and Engineering, New York, McGraw-Hill Book Co., Inc.

LeRoy, L. W., 1951, Subsurface Geologic Methods, Golden, Colo., Colorado School of Mines

Paige, Sidney, et al., 1950, Application of Geology to Engineering Practice, Geol. Soc. America, Berkey Volume, Baltimore, Md., Waverly Press, Inc.

Ries, H. and T. L. Watson, 1949, Elements of Engineering Geology, New York, John Wiley & Sons, Inc.

Schultz, J. R. and A. B. Cleaves, 1955, Geology in Engineering, New York, John Wiley & Sons, Inc.

Trask, Parker D., Ed., 1950, Applied Sedimentation, New York, John Wiley & Sons, Inc.

U. S. Bureau of Reclamation, 1963, Earth Manual, 1st ed., rev., Washington, D. C., U. S. Gov't. Print. Office

U. S. Bureau of Reclamation, 1960, Design of Small Dams, Washington, D. C., U. S. Gov't. Print. Office.

Geomorphology

Fenneman, N. M., 1931, Physiography of Western United States, New York, McGraw-Hill Book Co., Inc.

_____, 1938, Physiography of Eastern United States, New York, McGraw-Hill Book Co., Inc.

Highway Research Board, 1958, Landslides and Engineering Practice, Special Report 29, Washington, D. C., NAS-NRC Publ. 544

Leopold, L. B., M. G. Wolman and J. P. Miller, 1964, Fluvial Processes in Geomorphology, San Francisco, W. H. Freeman and Co.

Thornbury, W. D., 1954, Principles of Geomorphology, New York, John Wiley & Sons, Inc.

_____, 1965, Regional Geomorphology of the United States, New York, John Wiley & Sons, Inc.

Von Engeln, O. D., 1942, Geomorphology, Systematic and Regional, New York, Macmillan Co.

Ground Water

Meinzer, O. E., 1923, The Occurrence of Ground Water in the United States, U. S. Geol. Survey Water-Supply Paper 489.

Soil Conservation Service, USDA, (In Preparation), Section 18, Ground Water, National Engineering Handbook, 7 chapters

Tolman, C. F., 1937, Ground Water, New York, McGraw-Hill Book Co., Inc.

Bennison, E. W., 1947, Ground Water, Its Development, Uses and Conservation, St. Paul, Minn., Edward E. Johnson, Inc.

Todd, D. K., 1959, Ground Water Hydrology, New York, John Wiley & Sons, Inc.

Soil Mechanics

Casagrande, A., 1948, Classification and Identification of Soils, Trans. Am. Soc. Civil Engrs., v. 113

Holeman, J. N., 1965, Clay Minerals, U. S. Dept. Agr., Soil Conservation Service, Tech. Release 28, Washington, D. C.

Hough, B. K., 1957, Basic Soils Engineering, New York, The Ronald Press Co.

Krynine, D. P., 1947, Soil Mechanics, Its Principles and Structural Applications, New York, McGraw-Hill Book Co., Inc.

Peck, R. B., W. E. Hanson and T. H. Thornburn, 1953, Foundation Engineering, New York, John Wiley & Sons, Inc.

Terzaghi, K., 1955, Influence of Geological Factors on the Engineering Properties of Sediments, Harvard Soil Mechanics Series No. 50, Cambridge, Mass., Harvard University

Terzaghi, K. and R. B. Peck, 1948, Soil Mechanics in Engineering Practice, New York, John Wiley & Sons, Inc.

Structural Geology

Billings, M. P., 1942, Structural Geology, New York, Prentice-Hall Co.

Hills, E. S., 1963, Elements of Structural Geology, New York, John Wiley & Sons, Inc.

INDEX

abbreviations for samplers 4-7
acetone test 1-19
acid test 1-19
aerial photographs 6-2
age, geologic 1-16
Atterberg limits 1-8 1/, 1-25
arc hyperbolic sines 2-28 (table 2-2), 2-36 (table 2-6)
attitude 1-17
augers 2-6, 2-61, fig. 2-20

bailer fig. 2-24
barrel rack 2-68, fig. 2-25
bearing values 7-5, 7-8 (table 7-2)
benzidine test 1-20
bits 2-15, fig. 2-16, 2-50, 2-52, fig. 2-17, fig. 2-18, 2-55 (table 2-10), 2-56, fig. 2-19, 2-61, fig. 2-20, fig. 2-21, fig. 2-22
bit clearance 2-42
bit pressure 2-58
bit speed 2-50
blanketing 3-3
blasting i, 1-15
blow count 4-3, 5-2
bore holes (see test holes)
boring 2-6
borrow 3-2, 7-9
box samples 2-2, fig. 2-3
bucket augers fig. 2-20

casing 2-6, 2-24, 2-74
caverns 1-14
cementation 1-13
channels 1-34 (table 1-10), 7-10
chopping bits 2-62
chunk samples fig. 2-2
classification, of dam sites 5-3
clay 1-2
clay minerals ii, 1-2, 1-5, fig. 1-2, 3-2
clean-out tools 2-68, fig. 2-24
coefficient of,
curvature 1-23, fig. 1-4, 1-26 (table 1-5)
permeability 1-9, 2-17
uniformity 1-23, fig. 1-4, 1-26 (table 1-5)
cohesiveness 1-8
color of materials 1-15

1/ underlining indicates definition or most important reference

INDEX (Cont'd.)

composition, mineral	1-5
consistency	1-8, 1-23, 1-25
consolidation	1-11, 1-14
contracting	7-2
core barrel	2-47
core boxes	3-6
core recovery	2-59, 4-7
core size	3-5
correlation	1-16, 4-3
cribbing	ii, 2-2
cylinder samples	fig. 2-1
dam sites	5-3
denison barrels	2-47, fig. 2-16
density	1-9
depth of boring	5-4, 7-5
detailed site investigation	5-2, chapter 7
diamond bits	2-56, fig. 2-19
dilatancy	1-25, 1-28 (table 1-7), fig. 1-5
dip	1-14
displacement boring	2-7
disturbed samples	(see sample disturbed)
double-tube sampler	2-47, fig. 2-16
drilling	2-7, 2-60
drilling equipment	2-15
drilling fluids	2-58, 2-74,2-76 (table 2-11)
drill rods	2-66
drill rigs	2-69, fig. 2-27, 7-11
drive hammer	2-47, 2-66, fig. 2-23
drive sampling	2-38, 2-43 (table 2-9)
dye tracers	ii, 7-13
earth materials	iv
ease of excavation	1-15
electrical resistivity	2-11, 2-13, fig. 2-6
embankments	iv, 1-33 (table 1-9)
emergency spillway	3-2, 7-6
equipment	2-2, 2-15, 2-66, 7-1
excavation of material	1-15, 5-5
expanding packer	3-5, fig. 3-1
exploration	chapter 2
exploration, subsurface	2-6
explosives	i
exposures	2-1
faults	1-18

INDEX (Cont'd.)

field classification	1-19, fig 1-5, 1-27 (table 1-6), 1-28 (table 1-7)
field notes	3-5, 4-1
field study	6-3
field tests	1-19, 1-25, fig. 1-5
fish tail bits	2-62, fig. 2-22
folds	1-17
forms	
SCS-35a, b, c	1-17, 3-3, 4-1, 6-4, 7-2
SCS-315	7-3
SCS-353	fig. 1-4
SCS-356	3-3, 3-11
SCS-375	3-4
SCS-376a, b, c	7-13
SCS-533	3-9, 3-11, 6-4
SCS-533a	4-6
SCS-534	3-3, 3-9, 3-11
foundations	1-14, 1-34 (table 1-10), 2-1, 3-1, 3-3, 7-10
foundation sampling	3-1, 7-1, 7-4
geologic profiles	4-4, fig. 4-1
geologic reconnaissance	1-17
geologic report	6-4, 7-13
geologic symbols	fig. 1-3
geophysics	2-8, fig. 2-4, fig. 2-5, fig. 2-6
gradation	1-2, 1-11, 1-23
grade scale	1-3 (table 1-1)
grain	1-2
grain size	1-23, fig. 1-4
graphic logs	4-3
ground water	7-12
gypsum, test for	1-19
hand auger	2-6
hardness	1-6
hole cleaning	2-59
joints	1-18
labeling	3-10
liquid limit	1-8
loading values	7-5, 7-7 (table 7-1), 7-8 (table 7-2)
logging	chapter 4
mapping	6-4
mass characteristics	1-8
materials	iv, chapter 1
mineral composition	1-5

INDEX (Cont'd.)

mineral hardness 1-6
mines 1-14
moisture content 1-9

natural log table 2-28 (table 2-3)
numbering of holes 4-1, 7-4

open-drive samples 2-38, fig. 2-14
outcrops 2-1

packaging of samples 3-5
packer 3-6
packer test 2-25, fig. 2-12
paleontology 1-18
particle characteristics 1-2, 1-5
particle shape 1-2, 1-5, fig. 1-1
particle size 1-2
penetration test 2-13, 2-15 (table 2-1), 2-47
percussion drilling 2-7
permeability 1-9, 1-10 (table 1-2), 2-17, fig. 2-9, 3-3, 7-13
conversion factors 1-10 (table 1-2)
physical properties of materials 1-8
piston samplers 2-38, fig. 2-15
plasticity index 1-8
plastic limit 1-8
power auger 2-6
pressure tests 2-19, fig. 2-9, fig. 2-10, 5-5
principal spillway 3-2, 7-6
pump tests 2-22
photo-interpretation 6-2

reference data, geologic 6-1
relief wells 3-3, 7-10
reports (see geologic reports)
resistivity 2-11, fig. 2-6
rock 1-1, 1-14
rock core barrel 2-52, fig. 2-17, fig. 2-18
rock core samples 3-2, 3-5
rock excavation 1-14, 5-5, 7-9
rock properties 1-2, 1-11
rock strength 1-11
rock structure 1-11
rock workability 1-15
roller bits 2-62, fig. 2-22
rotary drilling 2-8, fig. 2-27

INDEX (Cont'd.)

safety	i.
sample catch pan	2-68
sample containers	3-10
sample, disturbed	3-1, 3-7
sample holes	7-11
sample labeling	3-6, 3-10
sample needs	3-1, 3-7
sample recovery ratio	4-7
sample shipping	3-10
sample size requirements	3-4, 3-7
sample storing	3-6
sample, undisturbed	fig. 2-1, fig. 2-2, fig. 2-3, 3-1, 3-2, 3-4
samplers, abbreviation	4-7
samples	chapter 3
sampling requirements	3-1, 5-6, 7-11
sampling tools	2-15, 2-38, 2-39 (table 2-7), 2-40 (table 2-8), 2-43 (table 2-9), 2-52, fig. 2-17, fig. 2-18, 2-55 (table 2-10), 7-3
scale	4-4
sealing	3-3
seismic refraction	2-9, fig. 2-4, fig. 2-5
shape of particles	(see particle shape)
shearing strength	1-11, 1-14
Shelby tube sampler	2-38, 2-40 (table 2-8), fig. 2-14, 2-43 (table 2-9)
shine test	1-19
shrinkage limit	1-8
silt	1-2
site investigation	chapters 5, 6, 7
size distribution	1-23
slush pits	2-68
soils	1-2, 1-21
soil mechanics	3-4, 3-7
soil properties	1-22 (table 1-4)
spillways	iv, 3-2, 5-5, 7-6
split-barrel sampler	fig. 2-7, 2-38, 2-46, 7-3
stabilizing bore holes	2-74
standard penetration test	(see penetration test)
stratigraphy	1-15
strength of rocks	1-11
stress values	7-7 (table 7-1)
structure, geologic	1-17
structure of rocks	1-11
subsurface investigation	7-1
symbols, geologic	fig. 1-3

INDEX (Cont'd.)

test,
  calcium carbonate 1-19
  chemical analysis of water 5-7
  clay mineral 1-20
  dilatancy 1-25, 1-27 (table 1-6), 1-28 (table 1-7), fig.1-5
  dry strength 1-25, 1-27 (table 1-6), 1-28 (table 1-7), fig.1-5
  field penetration 2-13, 2-15
  gypsum 1-19
  organic material 1-19
  permeability 2-17, fig. 2-9, fig. 2-10, fig. 2-11, fig. 2-12, fig. 2-13, 3-5
  pressure 2-19, fig. 2-9, fig. 2-10
  pumping-in 2-22, fig. 2-11
  toughness 1-25, 1-27 (table 1-6), 1-28 (table 1-7), fig.1-5
  triaxial-shear 3-5
  vane-shear 2-17, fig. 2-8
  well permeameter 2-29, fig 2-13, 2-32 (table 2-4) 2-34 (table 2-5)
test holes ii, 1-16, 2-6, 2-74, 5-2, 7-4
test hole numbering system 4-1, 7-4
test pit ii, 2-1
texture 1-11
thin-wall drive sampler fig. 2-14, 7-3
tracers, dye ii, 7-13
trenches ii, 2-1

undisturbed sample (see sample, undisturbed)
unified soil classification 1-1, 1-3 (table 1-1), 1-20, 1-26 (table 1-5), 1-27 (table 1-6), 1-28 (table 1-7), 1-32 (table 1-8), 1-33 (table 1-9), 1-34 (table 1-10), 4-2, 4-7

vane shear 2-17, fig. 2-8

wash boring 2-7
water, chemical analysis 3-4, 5-7
water table 4-3, 7-12
water trucks 2-69
wax seal for samples 3-6
weathering 1-13
well permeameter (see under test)
workability of rock 1-15
written logs 4-6

*U.S. GOVERNMENT PRINTING OFFICE : 1978 0-261-519/SCS-381