SECTION 6

Structural Design - General

1. General Discussion. Structural design is a combination of practical engineering sense and theory. The design process involves two broad phases of the total job. In the first phase the general features or layout of the job are decided upon, tentative selections of the various types of materials to be used are made, and decisions as to the functional requirements of the job are reached. The second phase involves the proportioning of the various parts of the structure to carry the required loads. These two phases are closely related by several factors, one of which is the necessity to produce the required structure economically.

A good structural designer will have a thorough knowledge of construction methods and practice, and he will constantly strive to prepare plans that can be executed without unusual complications; he will weigh the extra costs involved in the construction of complicated details against the functional advantages thereof.

He must ask the following questions over and over during the design process: First, how does this structure and its parts bend, deflect, or move? Second, how can it fail? These are powerful questions. Seldom can the first question be answered with quantitative precision, but it can usually be answered qualitatively. It may be difficult to estimate the magnitude of the strains, rotations, and displacements, but it is imperative that the sense and location of these movements be well defined. Consideration of the second question should include the possibility of failure by collapse of one or all of the structural elements or by sliding, settlement, or some other form of displacement of the entire structure.

Durability is an extremely important factor in the design of hydraulic structures. The durability of a structure is affected by design assumptions, materials, construction practice, and climate. It is not enough to design a structure so that it has sufficient structural strength only; it must be designed to resist structural or physical deterioration for the anticipated life of the structure. Reinforced concrete hydraulic structures that will be subjected to numerous freezing and thawing cycles must be so designed and built that cracks of sufficient size to permit concentrated seepage of water through the structure will be prevented.

Often there are several ways to solve a design problem, two or maybe three of which are definitely superior to the others. Any engineer that has worked in the design field for very long will have assembled a set of design notes, aids, and ways of doing things that he likes and with which he is familiar. His methods may be excellent or they may be inefficient and yet produce sound results. It is far beyond the scope of this handbook to attempt to include even several of the different methods or procedures that might be used to solve any one of the various problems treated. In general, the procedure will be to present one system or method of solution that is practical and adequate and then illustrate it with examples. In some cases various methods will be presented to demonstrate the advantage of one or to facilitate the combination of a set of computations with subsequent steps in the solution of a general problem.

2. Loads. One of the most difficult jobs confronting the structural designer is the determination of the loads to be carried by the structure. Many questions need to be answered. What possible loads can come to the structure during its lifetime including the construction period? In what possible combinations can these various loads act? What are the relationships between magnitude and frequency of the various loads and what effect should these relationships have on design load and unit stress assumptions? What hazards are involved should the structure fail?

Answers to the above questions will provide guidance in selecting design loads. Specially designed structures of unusual magnitude, cost, or complexity, or those in which the hazards are high, should failure occur, will justify a considerable expenditure of time and energy for accurate determination of loads. Such structures are designed for a specific location and purpose and extensive studies in soil mechanics and other fields may be justified.

On smaller structures where the hazards of failure and costs are both comparatively low, it is reasonable and practical to develop standard detailed construction plans that can be used from job to job over a wide range of conditions. The problems of load determination for the design of such structures are somewhat different than for a specific structure to be built at a given location. In the design of standard structures an attempt must be made to determine the average load for each of the various possible loading conditions and then check to be certain that the maximum loads do not encroach on the factor of safety too far. This is more easily said than done because of the many variables such as differences in construction materials at different locations, differences in types of soil, both in foundations and backfill, and differences in climate and exposure conditions.

2.1 Dead Loads. Dead loads are fixed in magnitude, point of application, and direction and act on the structure continuously. They result from the weight of the structure itself and attached appurtenances, and always act in a vertical direction since they result from the pull of gravity.

Extensive tables of weights and specific gravity are given in several handbooks, and it is considered unnecessary to reproduce them here. One such table can be found in the Manual of the American Institute of Steel Construction entitled "Steel Construction"; another is in King's "Handbook of Hydraulics."

The selection of specific weights requires thought and good judgment. Often materials thought of as having fixed specific weights (unit weight) vary considerably in density. For example, the specific gravity of aluminum will vary from about 2.55 to 2.75. The weight of earth in pounds per cubic foot will vary from 65 to 130 depending upon the moisture content, void ratio, and specific gravity of the solid particles. Very well compacted earth may vary from 90 to 130 lbs. per cu. ft.

For standards and small structures, average values must be chosen with good judgment. On specific structures more precise values should be used.

Special caution is justified in those cases where the effective weight of a material is lowered by its submersion in water. Remember that a body heavier than water is reduced in effective weight by an amount equal to the weight of the displaced water, and a body lighter than water by unit weight (specific weight) will displace its weight of water if it floats; if it is submerged, it must be held down by a force equal to the weight of the displaced water minus the weight of the body in air. A more thorough treatment of this subject is found in the section on "Hydraulics - General."

2.2 Live Loads. All loads other than dead loads are live loads. Live loads may be steady or unsteady, fixed, movable or moving; they may vary in magnitude and be applied slowly or suddenly. Fortunately most live loads encountered in the design of hydraulic structures are fixed and relatively steady. However, load fluctuations may be severe and very rapid in a pipe line when a valve is closed suddenly or when there is an abrupt change in flow conditions in the pipe. Bridges are subject to moving loads and impact effects. Earth pressures will vary in intensity but are slow in changing.

2.2.1 Hydrostatic Pressure. Triangular and trapezoidal pressure diagrams that indicate a linear relationship between intensity of pressure and depth are used to represent both water pressure and earth pressure. See Section 5, Hydraulics - General, for a more complete treatment of hydrostatic pressure, or refer to King's "Handbook of Hydraulics", or to any standard textbook on hydraulics.

The solution of a simple but common problem involving hydrostatic pressure is given below. In this illustration the solution is found by three equivalent but slightly different procedures. Note the ease with which this particular problem is solved by the use of drawing ES-4. It will usually be found that this procedure is easiest and most rapid for rectangular areas, the most common case encountered.

Problem: Find magnitude and point of application of resultant pressure on a vertical slice (12 inches wide) of the submerged sluice gate shown below. The gate opening is 5'-0" high. Neglect loads around edge of gate that are directly against the gate frame.

Solution No. 1 - (See Fig. 6.2-1.) Compute intensities of pressure at top and bottom of gate as shown on the drawing. Next compute moment of load diagram about bottom of gate.

	Load	x	Arm	=	Moment
187 x 5.00 =	935 lbs.	x	2.50 ft.	=	2338 ft. lbs.
1/2 x 312 x 5.00 =	780 "	x	5/3 "	=	1300 " "
P =	1715 lbs.		M	=	3638 ft. lbs.

For the resultant P to have the same moment about the base as the load diagram it must be located a distance, e, above the bottom of the gate opening = M ÷ P = 3638 ÷ 1715 = 2.12 ft.

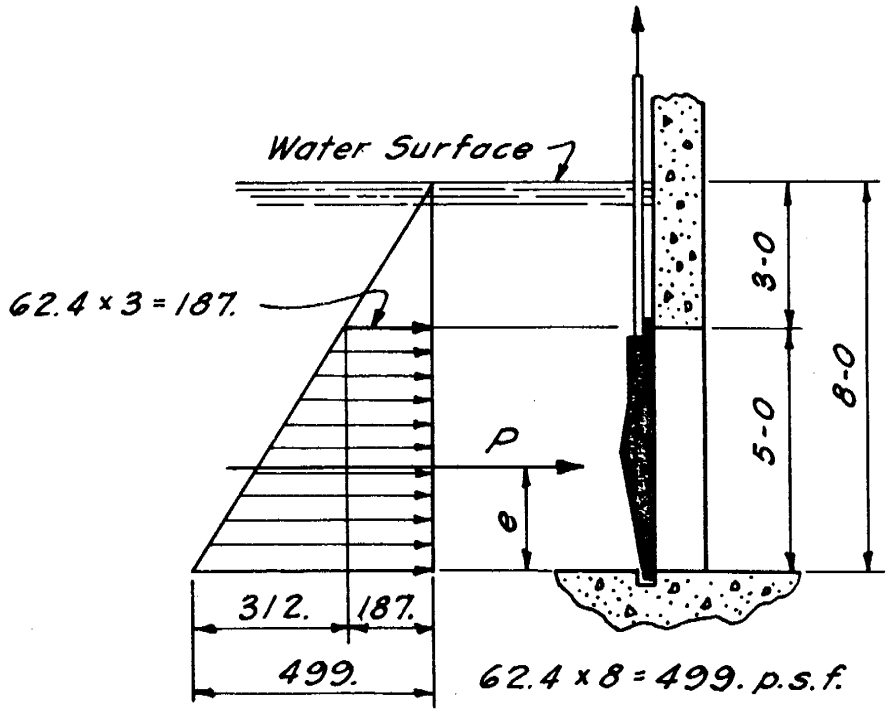

FIG. 6.2-1

Solution No. 2. King's "Handbook of Hydraulics", page 20, 3rd edition:

$$P = wAy = 62.4 \times 5 \times 1 \times 5.50 = \underline{1715} \text{ lbs.}$$

$$x = y + \frac{k^2}{y} = 5.5 + \frac{\frac{5^2}{12}}{5.5} = 5.88 \text{ ft.}; \quad 8.00 - 5.88 = \underline{2.12} = e$$

Solution No. 3. Use drawing ES-4 for y = 8-0, h = 3-0, and w = 62.4

$$S = P = 27.5 \times 62.4 = 1716 \text{ lbs.}$$

$$M = 58.3 \times 62.4 = 3638 \text{ ft.lbs.}$$

$$\frac{M}{P} = \frac{3638}{1716} = \underline{2.12} \text{ ft.} = e$$

2.2.2 Active Lateral Earth Pressure. The determination of precise values for lateral earth pressure is difficult, if not impossible, because of the wide variation in soil types and characteristics, soil moisture relationships, rigidity of the restraining wall, and other factors. The classic theories give reasonably good results in those cases where the physical conditions closely approximate the assumptions on which the theory is based; they may be in serious error for cohesive or wet soils or unyielding walls.

During recent years this subject has received considerable attention as a part of the rapid development of the field of Soil Mechanics. As yet, however, there has been no reasonably easy and accurate solution to this general problem. Extensive tests of the physical and structural properties of soil are needed to make use of the currently available advanced methods of solution. Only in unusual cases would the type and size of structures built by the Soil Conservation Service justify such tests.

Hence, it has been arbitrarily decided to use the classic method of Coulomb and the other customary practice based on equivalent fluid pressures as the two most applicable methods for our work.

Coulomb's method is applicable only to dry, noncohesive, permeable soils of high structural strength best exemplified by relatively clean sand or gravel.

Coulomb's general equation for active earth load on a yielding wall is:

$$P = 1/2\ wH^2 \frac{\sin^2(\theta - \phi)}{\sin^2\theta \sin(\theta + Z)\left(1 + \sqrt{\frac{\sin(Z + \phi)\sin(\phi - i)}{\sin(\theta + Z)\sin(\theta - i)}}\right)^2} \qquad (6.2\text{-}1)$$

where

P = total pressure per linear foot of wall in lbs.
w = specific (unit) weight of soil in lbs. per cu. ft.
H = height of wall in ft.
θ = angle between back face of wall and horizontal.
ϕ = angle of internal friction of the soil.
Z = friction angle between soil and back of wall.
i = angle of surcharge between fill slope and horizontal.

Coulomb's equations are based on the assumption of linear variation in pressure; hence, P always acts on the surface under consideration at H/3 above the base.

Dry, clean sand and gravel evidence values of the variables involved approximately as indicated below:

Variable	Units	Min.	Max.	Remarks
w	lbs/ft^3	100	120	Increases with compaction
ϕ	degrees	35	45	Increases with compaction
Z	degrees	20	25	Sand against concrete

Note: If the fill will be subjected to vibration from any source, the value of Z should be taken as zero. Tractors used for backfilling will usually provide sufficient vibration to warrant reducing Z to zero in addition to producing a surcharge on the wall.

This nomenclature is illustrated in fig. 6.2-2 below.

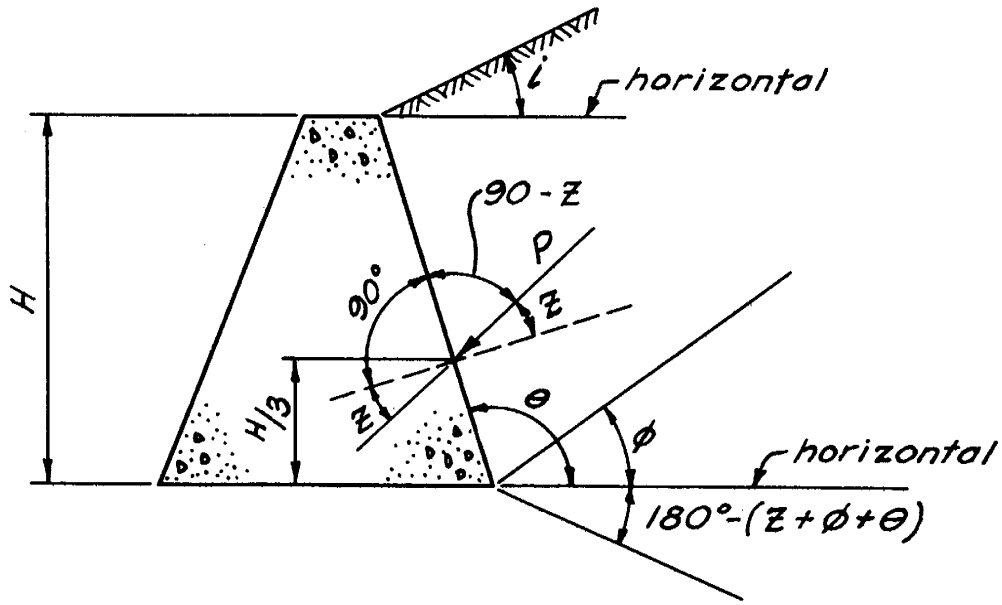

FIG. 6.2-2

Culmann has developed a graphical solution to Coulomb's equation that has practical value, particularly for those cases in which the backfill surface is irregular or carries a surcharge. This graphical solution is illustrated by the following examples.

Example 1 - (See fig. 6.2-3)

Step 1. Draw a sectional elevation of the wall and the earth fill surface to scale, compute the values of angles θ and i, and then tabulate the values of θ, i, ϕ, Z, and w.

Step 2. Lay out lines AB and AC as shown in fig. 6.2-3. Line AB is laid off from A, the heel of the wall, above the horizontal line AD so that the angle BAD = ϕ. Line AC is laid off from A below the horizontal line AD so that the angle DAC = $180^{\circ} - (Z + \phi + \theta)$.

Step 3. Compute the weight of the various earth fill slices indicated. An easy way to do this in this case is: Extend the earth fill line past point M and draw the line AM through A so that the angle NMA is 90 degrees. Scale or compute the length of the line AM. Next lay off distances 8, 10, 12, etc., feet from point 0 along the earth fill line to the scale used in drawing the wall. Draw the lines A8, A10, A12, etc., thus defining various earth slices whose weights are to be computed. In a case such as this, the use of an even increment of distance along the earth fill slopes will facilitate the computations as will be seen later.

The weight of the earth slice (1 foot thick) 0-8-A-0 is determined by multiplying the base of the triangle = 8 feet by the height = 12.02 feet by one-half by the unit weight of the earth. (See the computations on fig. 6.2-3.) The weight of the slice 0-10-A-0 is found by adding the weight of the slice increment 8-A-10-8 to the weight of the slice 0-8-A-0. The weight of the slice increment is computed as shown in fig. 6.2-3. Add increments to obtain weight of other slices.

Step 4. To some convenient scale lay off the weights of the various earth fill slices along the line AB with the zero point of the scale at A, thus locating points W8, W10, etc.

Step 5. Next draw lines from W8, W10, etc., parallel to the line AC to an intersection with the corresponding lines A8, A10, etc.; i.e., the line from W8 parallel to AC is drawn to an intersection with the line A8, etc.

Step 6. Connect the points of intersection obtained in step 5 with a smooth curve and draw a tangent to this curve parallel to the line AB.

Step 7. From the point of tangency found in step 6 draw a line paralle to AC back to the line AB. The length of line at the scale used in plotting the weights along AB is the value of the resultant load on the wall = P. Th horizontal and vertical components of P can be found graphically as indicated in fig. 6.2-3.

Step 8. Locate the point of application and direction of the resultant load P. The point of application of the load is on the wall a vertical distance of one-third H above its base. The direction of P is defined by the angle Z.

This graphical solution can be checked by substitution in Coulomb's general equation as follows:

$$P = \frac{0.5 \times 100 \times 12^2 \times \sin^2(99^\circ 28' - 35^\circ)}{\sin^2 99^\circ 28' \sin(99^\circ 28' + 20^\circ)\left(1 + \sqrt{\dfrac{\sin(20^\circ + 35^\circ)\sin(35^\circ - 18^\circ 26')}{\sin(99^\circ 28' + 20^\circ)\sin(99^\circ 28' - 18^\circ 26')}}\right)^2}$$

$$= \frac{7200 \times (0.90234)^2}{(0.98638)^2(0.87064)\left(1 + \sqrt{\dfrac{0.81915 \times 0.28513}{0.87064 \times 0.98778}}\right)^2} = 3000 \text{ lbs.}$$

The horizontal and vertical components of P can be computed from the following equations:

$$P_h = P \cos\left[Z + (\theta - 90^\circ)\right] = 3000 \cos 29^\circ 28' = 2620 \text{ lbs.}$$

$$P_v = P \sin\left[Z + (\theta - 90^\circ)\right] = 3000 \sin 29^\circ 28' = 1470 \text{ lbs.}$$

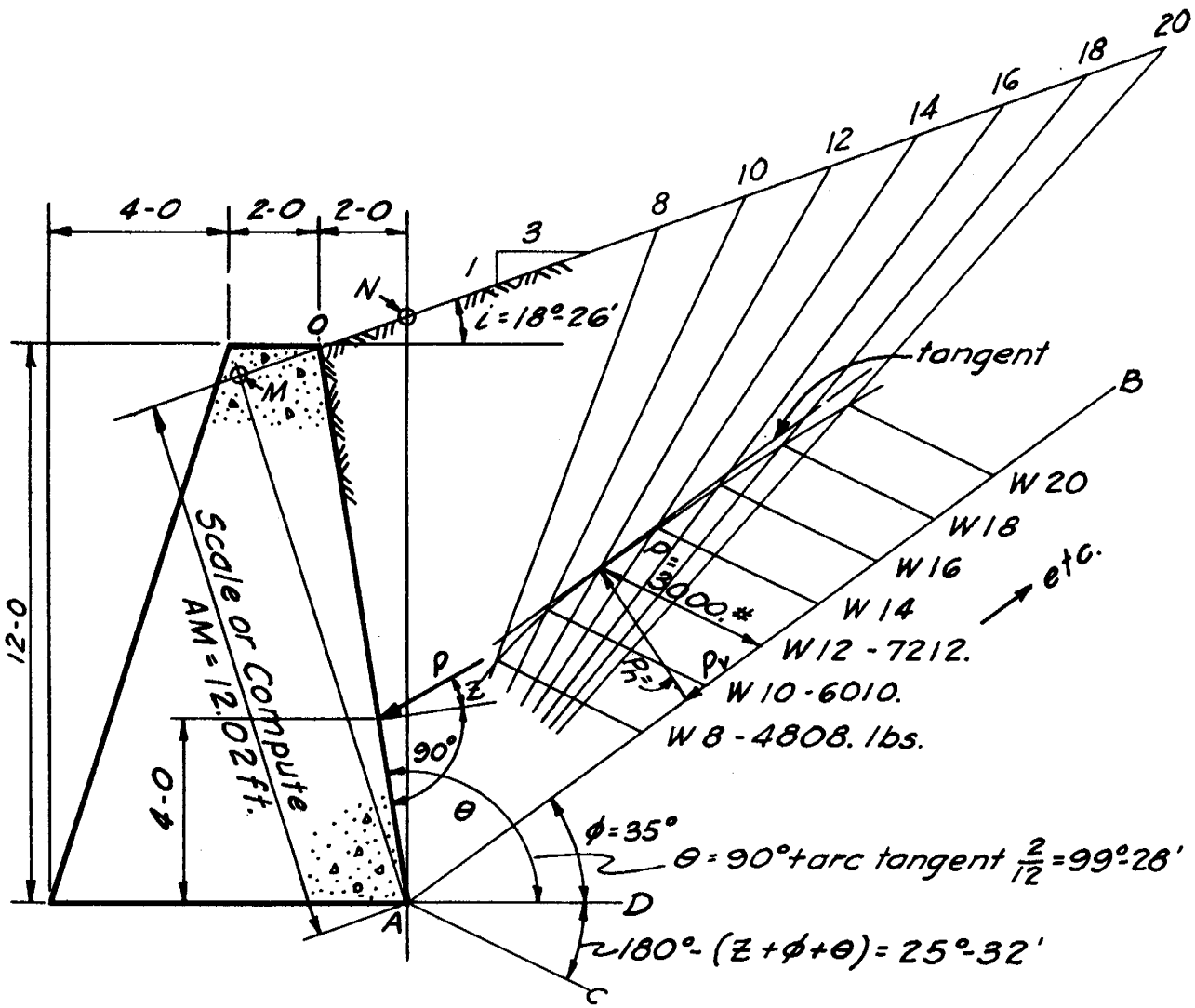

$w = 100$ lbs/ft^3
$\theta = 99^\circ\text{-}28'$
$\phi = 35^\circ$
$Z = 20^\circ$
$i = \text{arc tan } \frac{1}{3} = 18^\circ\text{-}26'$

Compute AM

$$AN = 12 + \frac{2}{3} = \frac{38}{3}$$

$$\frac{AM}{AN} = \frac{3}{\sqrt{10}} \text{ or } AM = \frac{38}{3} \times \frac{3}{\sqrt{10}}$$

$$AM = 12.02$$

Compute Slice Weights

$$W8 = \frac{1}{2} \times 8 \times 12.02 \times 100 = 4808 \text{ lbs.}$$

$\Delta_2 W$ = weight of 2 ft. slice increment

$$= \frac{1}{2} \times 2 \times 12.02 \times 100 = 1202$$

$$W10 = W8 + \Delta_2 W = 4808 + 1202 = 6010 \text{ lbs.}$$

$$W12 = 6010 + 1202 = 7212 \text{ lbs.}$$

Etc.

FIG. 6.2-3

If the angles i and Z equal zero and angle θ = 90 degrees, then Coulomb's general equation reduces to

$$P = 1/2\ wH^2 \frac{1 - \sin \phi}{1 + \sin \phi} \qquad (6.2\text{-}2)$$

which is identical to Rankin's equation for this case.

This case is illustrated in the following example. Its solution is probably most easily accomplished by the above equation (6.2-2) unless a scale drawing of the wall and other tools are readily available for the graphical construction. The graphical solution is demonstrated to point out some important relationships for this case and to further illustrate its use.

<u>Example 2</u> - (See fig. 6.2-4)

A two-foot surcharge has been assumed in this case; this is approximately equivalent to a heavy crawler-type tractor that might be expected to operate close to the top of the wall during construction operations. Paragraph 3.2.18, page 137, of the "Standard Specifications for Highway Bridges" of the American Association of State Highway Officials requires the placement of a two-foot surcharge of earth where highway traffic can be expected within a distance of one-half H from the top of the wall. In either case, the two-foot surcharge is a logical addition to the load on the wall. In such cases Z should be taken equal to zero.

The graphical solution was made following the procedure outlined in example 1. Where the top of the fill is horizontal, as in this case, the bisector of the angle TAB defines the wedge of maximum thrust so that the maximum value of P can be drawn without constructing the curve.

The value of P = 2290 lbs, found from the graphical construction, is the load on the surface OA. The value of the load on AT can be found most easily by converting P into an equivalent fluid pressure diagram as shown in fig. 6.2-4. From this equivalent fluid pressure diagram the load on the wall AT becomes a trapezoidal pressure diagram. The resultant of the trapezoidal pressure diagram can be found as indicated in fig. 6.2-4, or the total load and moment about the base can be found very easily by the use of drawing ES-4 as follows: For h = 2, y = 13, and w = 27.1,

$$R = S = 82.5 \times 27.1 = 2240 \text{ lbs.}$$

$$M = 342.8 \times 27.1 = 9290 \text{ ft.lbs.}$$

The solution for P given in fig. 6.2-4 may be checked by equation (6.2-2).

$$P = 1/2\ wH^2 \frac{1 - \sin \phi}{1 + \sin \phi} = 1/2 \times 100 \times 13^2 \frac{1 - \sin 35^\circ}{1 + \sin 35^\circ}$$

$$= 8450 \times \frac{0.42642}{1.57358} = 2290 \text{ lbs.}$$

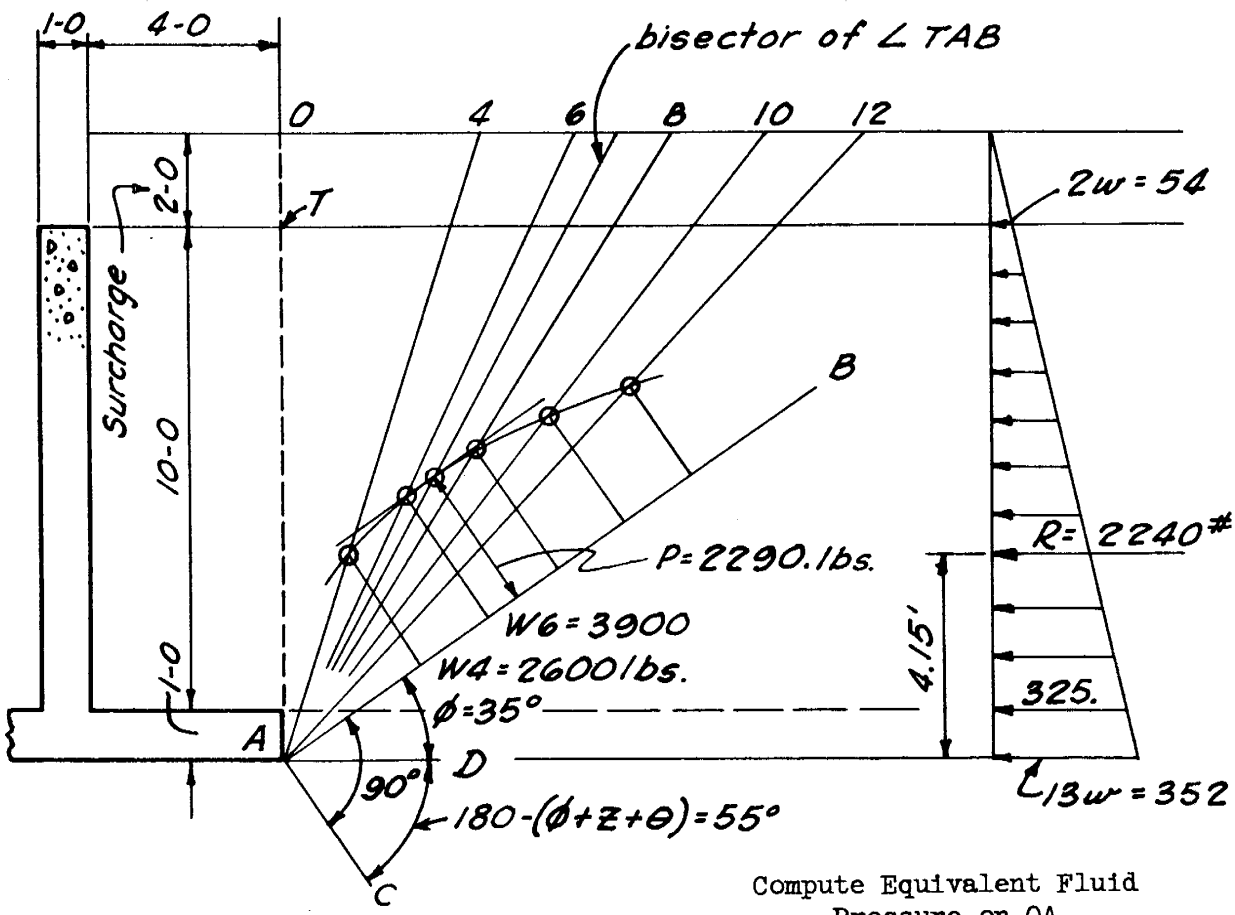

$\theta = 90^{\circ}$, $Z = 0$

$w = 100$ lb/ft^3

Compute Slice Weights

$W4 = 1/2 \times 4 \times 13 \times 100 = 2600$ lbs

$\Delta_2 W$ = weight of 2 ft slice increment

$= 1/2 \times 2 \times 13 \times 100 = 1300$ lbs

$W6 = 2600 + 1300 = 3900$ lbs

Etc.

Compute Equivalent Fluid Pressure on OA

$1/2\ wH^2 = 2290$ lbs

$$w = \frac{2290 \times 2}{13^2} = 27.1 \text{ lb/ft}^3$$

Resultant load and moment from dwg. ES-4 for y = 13 and h = 2

$R = 82.5 \times 27.1 = 2240$ lbs

$M = 342.8 \times 27.1 = 9290$ ft lbs

$$\frac{M}{R} = \frac{9290}{2240} = 4.15 \text{ ft}$$

FIG. 6.2-4

If the angle $\theta = 90$ degrees and angle Z = zero, then Coulomb's equation reduces to

$$P = 1/2\ wH^2 \frac{\cos^2 \phi}{\left(1 + \sqrt{\frac{\sin \phi \sin(\phi - i)}{\sin(\theta - i)}}\right)^2} \qquad (6.2\text{-}3)$$

Example 3 - (See fig. 6.2-5)

In this example a negative value of the angle i has been assumed and an illustration solved graphically and algebraically. The graphical solution is straightforward following the rules previously given. Signs of the angles must be watched in the algebraic solution. For example, in this case, $\sin(\phi - i) = \sin 30^\circ - (-26^\circ 34') = \sin(30^\circ + 26^\circ 34')$.

Note that when Z = 0, the direction of the resultant load is normal to the wall; then if the wall is vertical (θ = 90 degrees), the resultant load P is horizontal.

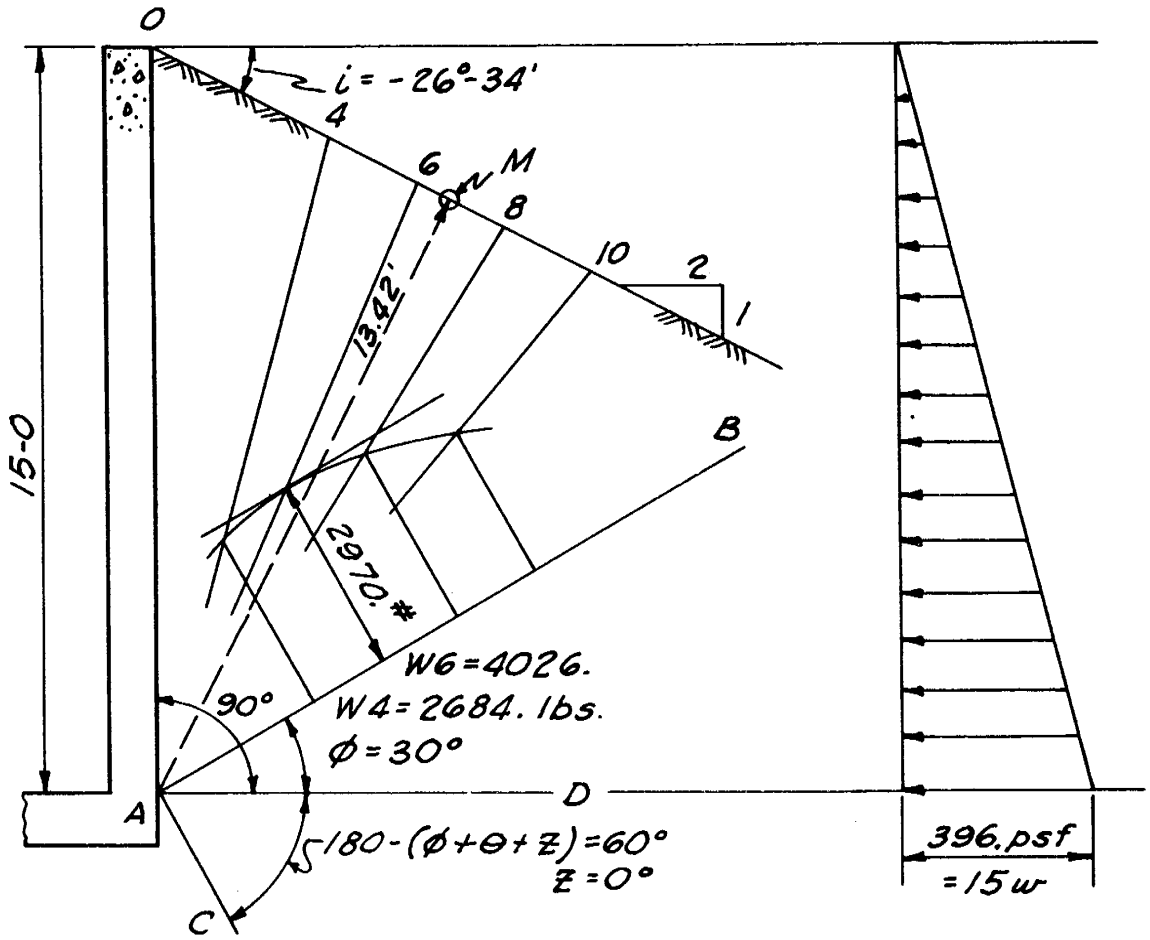

AM = 15 cos 26°34' = 13.42 ft.

W4 = 1/2 x 4 x 13.42 x 100 = 2684 lbs

$\Delta_2 W$ = 1/2 x 2 x 13.42 x 100 = 1342 lbs

W6 = W4 + $\Delta_2 W$ = 2684 + 1342 = 4026

W8 = W6 + $\Delta_2 W$; etc.

Equivalent fluid pressure

$1/2\ wH^2 = 2970$

$w = \frac{2970 \times 2}{225} = 26.4\ \text{lbs/ft}^3$

FIG. 6.2-5

Algebraic Solution: (Based on equation 6.2-3.)

$$P = 1/2\ wH^2 \frac{\cos^2 \phi}{\left(1 + \sqrt{\frac{\sin\phi \sin(\phi - i)}{\sin(\theta - i)}}\right)^2} = \frac{0.5 \times 100 \times 225 \times \cos^2 30^\circ}{\left(1 + \sqrt{\frac{\sin 30^\circ \sin(30^\circ + 26^\circ 34')}{\sin(90^\circ + 26^\circ 34')}}\right)^2}$$

$$= \frac{11250 \times 0.866^2}{\left(1 + \sqrt{\frac{0.50 \times 0.835}{0.894}}\right)^2} = 2970 \text{ lbs.}$$

As pointed out previously, the lateral earth pressure depends on numerous characteristics of the backfill.

The shearing strength of the soil is determined by tests that give values of the angle of internal friction, ϕ, and of cohesion. For relatively clean sand and gravel the angle of internal friction is high. It usually varies between 35 and 45 degrees and is affected very little by moisture content; the cohesion is negligible. The moisture content of clay affects its shearing strength so that the angle ϕ may vary from zero for fully saturated clay to about 30 degrees for dry clay; cohesion is usually quite high in dry clay with considerable decrease with increased moisture.

Permeability of the backfill may vary from very high values for clean sands and gravels to practically zero for consolidated clays.

The density of the backfill obviously is a factor in the lateral pressures that it will exert.

The most important single characteristic for most soils other than clean sands or gravels is the moisture content. Numerous tests have shown that earth pressures go up with an increase in moisture content of the backfill. The amount of moisture in a backfill depends upon several factors which can be grouped under two principal categories. They are: (1) factors affecting the availability of free water; and (2) those factors affecting the disposal of excess free water.

In general, there are two sources of surface supply and one of underground supply. Water may reach the backfill of a wall by direct rainfall, overland flow, or lateral underground seepage.

Good surface drainage and a layer of well-graded, relatively impervious soil of high density, that shrinks little on drying, placed on top of the backfill will help to reduce infiltration of water from the surface.

In open permeable soils above a low water table (below the bottom of the wall by several feet), water that does penetrate the soil surface seeps vertically through the profile and causes little if any increase in lateral pressure. Even in permeable soils, if the water table is high and no drainage is provided, the amount of water that infiltrates through

the surface may soon fill all the voids in the soil thus completely saturating it with an accompanying large increase in lateral pressure due to the addition of the hydrostatic load.

In soils of low permeability, adequate drainage is difficult and costly. The drainage usually provided for retaining walls and comparable structures is entirely inadequate for clay soils with the result that if a clay backfill is allowed to become wet, as it usually will, there is a gradual increase in lateral pressure with the increase in moisture until at complete saturation the backfill acts very much like a liquid.

Freezing temperatures and the subsequent formation of ice layers in fine-grained soils constitute another possible source of increased lateral earth pressures.

In view of the many factors that affect lateral earth pressures, it is somewhat presumptuous to present the following table; however, we are continually faced with the design of various types of structural elements that must satisfactorily resist lateral earth pressures. The previous discussion and the following table 6.2-1 should constitute a reasonable guide for estimating probable lateral earth pressures for small structures.

TABLE 6.2-1

Equivalent Fluid Pressures for Compacted Backfills of Various Soils with no Surcharge

Type of Soil	Permeability	Shearing Strength	Approx. Dry Weight lbs/ft^3	Equivalent Fluid Weight in lbs per cu ft		
				Ordinary Drainage		Saturated
				A[1]	B[2]	
1. Clean sand, gravel or sand-gravel mixture	high	high	110	30	35	80
2. Well-graded sand, silt, and clay mixture	low	high	125	40	65	85
3. Sandy, clayey silt	low	good	100	45	80	90
4. Clay	very low	low	100	90	90	120
5. Fluid mud, sluiced silty clay or clay		none	- -		--	135

[1]Condition A - Infiltration from rainfall is only source of surface water; good surface drainage away from the wall; low water table several feet below bottom of wall.

[2]Condition B - Subject to rainfall and inflow of surface runoff from adjacent areas; poor surface drainage; high water table near or above bottom of wall.

Drainage of the backfill is usually essential if pressures are to be kept low enough to permit economical designs. However, the cost of providing adequate drainage may be so high for clay and other fine-grained soils that it becomes economical to design relatively low walls for high lateral pressures and use only nominal customary drainage. The availability of pit-run sand or gravel for use as drains and the cost thereof will affect this decision. Obviously, it is impossible to state any fixed rule--the decision should be based on comparative cost studies for any particular structure and site.

A minimum amount of drainage should be provided for all walls subject to lateral earth pressure. Weep holes of 3 or 4-inch diameter with the lowest practical free outlet should be provided at 5 to 10 feet spacing with a coarse sand or gravel filter and collector running the full length of the wall. Such a filter should be at least 18 inches thick and have a horizontal dimension of 18 inches up, depending upon the soil type. In clayey silts and clays, the horizontal dimension of the filter might well be made equal to half the height of the wall if filter material is readily available and cheap.

It is often advantageous to use a perforated collector pipe in the filter and outlet this pipe through the wall at intervals of 50 to 100 feet. Usually such a pipe need not exceed four inches in diameter if it is placed on a one-percent grade and does not extend more than 50 feet on each side of the outlet. Such pipe should be durable and of sufficient strength to withstand the loads imposed on it.

Very good drainage of clay backfills can be accomplished by placing a large filter of clean, coarse sand or gravel or sand-gravel mixture back of the wall as indicated in fig. 6.2-6. This recommendation is based on work reported by Prof. Gregory P. Tschebotarioff of Princeton University in Paper No. 2374, Vol. 114, 1949, of the Transactions of the American Society of Civil Engineers entitled "Large-scale Model Earth Pressure Tests on Flexible Bulkheads." The following quotation is from page 431 of the above reference:

> "The use of a sand dike sloping away from the bulkhead of a natural (1:1.7) slope was found to be fully effective in reducing the fluid lateral pressures transmitted to the bulkhead from the unconsolidated fluid clay backfill behind the dike. The pressures against the bulkhead were no greater than those exerted by a backfill composed entirely of sand.
>
> "The interposition between the fluid clay backfill and the bulkhead of a vertical sand blanket with a width equal to the bulkhead height was found to be just as effective as the interposition of a sand dike. When the width of the blanket was equal to one-half the bulkhead height, it was only approximately one-half as effective, and it was completely ineffective when its width was equal to one-tenth of the bulkhead height. In the latter case the lateral pressures transmitted to the bulkhead from the unconsolidated clay backfill were no smaller than those of a fluid.
>
> "The foregoing statements should be taken only as indications of order of dimension, accurate to approximately $\pm$ 10 percent."

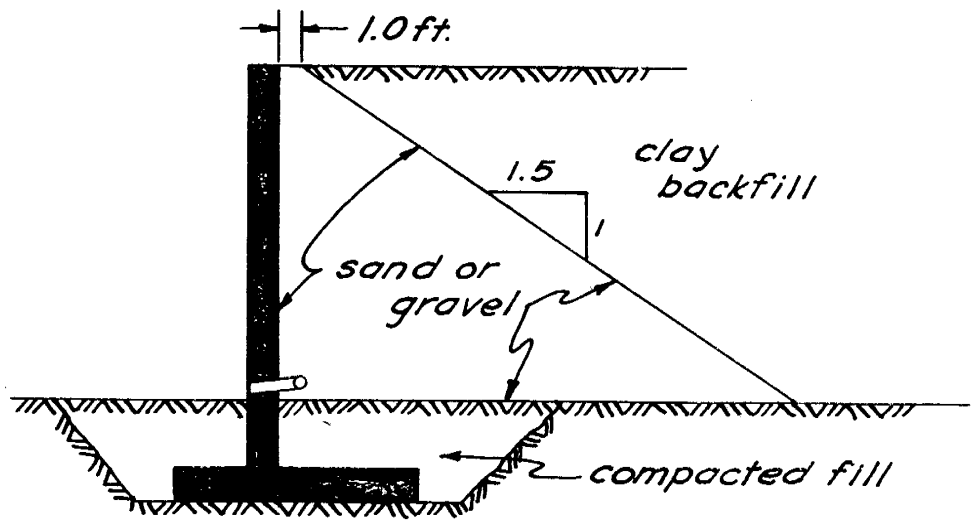

FIG. 6.2-6

Soils that contain appreciable amounts of clay are subject to excessive shrinkage. During dry periods, extensive cracking of such soils can be expected; cracks are quite apt to open up at the plane of contact between a wall and the backfill. Such cracks may extend to depths of 10 feet or more. Where such walls and backfills are subject to overland flow, the minimum lateral pressure for which the wall should be designed is full hydrostatic pressure, since water will enter the crack between the wall and the backfill and develop full hydrostatic pressure for the depth of the crack before the soil can swell to its original volume and slow down the infiltration of water at the surface of the ground.

The following references are good sources of information on lateral earth pressures:

1. "Soil Mechanics in Engineering Practice" by Karl Terzaghi and Ralph B. Peck; published by John Wiley and Sons.
2. "Fundamentals of Soil Mechanics" by Donald W. Taylor; published by John Wiley and Sons.
3. "The Theory and Practice of Reinforced Concrete" by Clarence W. Dunham; published by McGraw-Hill Book Co.

2.2.3 Passive Lateral Earth Pressure. Passive lateral earth pressures are more highly indeterminate than active pressures. As would be expected, less research has been done on them than on active pressures and the methods of evaluating passive pressure are more directly dependent upon theoretical mechanics without experimental verification. Hence, it is wise to be conservative in the use and evaluation of passive resistance in the design of structures.

Passive resistance of the earth in front of a retaining wall or cutoff wall under a dam is sometimes used to increase the factor of safety of the structure against sliding. Such practice is not recommended, but may be necessary in some cases.

Coulomb's equation for passive pressure is:

$$P_p = \frac{wH^2}{2}\left(\frac{\csc\theta\,\sin(\theta+\phi)}{\sqrt{\sin(\theta-Z)} - \sqrt{\frac{\sin(\phi+Z)\sin(\phi+i)}{\sin(\theta-i)}}}\right)^2 \qquad (6.2\text{-}4)$$

It is conservative and customary to ignore wall friction in computing passive pressure. Then when $Z = 0$ and the wall is vertical ($\theta = 90^\circ$), equation (6.2-4) reduces to:

$$P_p = \frac{wH^2}{2}\,\frac{\cos^2\phi}{\left(1 - \sqrt{\frac{\sin\phi\,\sin(\phi+i)}{\cos i}}\right)^2} \qquad (6.2\text{-}5)$$

When $Z = 0$, $\theta = 90^\circ$, and the earth surface is level ($i = 0$), equation (6.2-4) becomes:

$$P_p = \frac{wH^2}{2}\,\frac{1+\sin\phi}{1-\sin\phi} \qquad (6.2\text{-}6)$$

Table 6.2-2 gives approximate values of the ratio of passive lateral pressure to vertical pressure for a range of soil types and conditions. These values will give reasonable values of passive resistance and are especially useful where the earth surface is confined by the apron of a dam or where it carries a surcharge.

TABLE 6.2-2

Type of Soil	Ratio of Passive Lateral Pressure to Vertical Pressure	
	Dry	Saturated
1. Clean sand, gravel, or sand-gravel mixture	4	3
2. Well-graded sand, silt, and clay mixture	3	2
3. Sandy clayey silt	2	1
4. Clay	2	0

Unless the structure rests on a permeable foundation in which the water table is several feet below the bottom of the wall or cut-off wall, the saturated condition should be assumed in design.

Probable frost depths also influence the selection of values to be used. In silty clays, and clays especially, thaw and the accompanying change from ice to water will soften the soil and reduce its resistance to lateral movement to almost nothing. Unless the soil is very well drained, the passive resistance should be taken as zero for the normal average frost depth.

2.2.4 Loads on Underground Conduits. This subject is especially important to engineers of the Soil Conservation Service because of the numerous field conditions encountered that require such load determinations. Drop inlet barrels, inverted siphons, tile drains in unusually deep cuts, and culverts are examples of structures that are subjected to the loads discussed below.

Much of the following material has been taken from a paper by Prof. M. G. Spangler of Iowa State College entitled "Underground Conduits - An Appraisal of Modern Research" which was published as Paper No. 2337 of the 1948 Transactions of the American Society of Civil Engineers, Vol. No. 113. In the following discussion wherever direct quotations are made, they are from the above paper unless specifically designated otherwise. Prof. Spangler's equations and figures have been re-numbered to conform to the system herein.

"Underground conduits, in general, may be divided into two main classes on the basis of construction conditions under which they are installed, that is (1) ditch conduits and (2) projecting conduits.

(1) 'Ditch conduits' are structures installed and completely buried in narrow ditches in relatively passive and undisturbed soil. Examples of this class of conduits are sewers, drains, and water mains (see fig. 6.2-7).

(2) 'Projecting conduits' are structures installed in shallow bedding with the top of the conduit projecting above the surface of the natural ground and then covered with an embankment, as shown in fig. 6.2-7. Railway and highway culverts are good illustrations of this class of conduits. Conduits installed in ditches wider than about two or three times their maximum horizontal breadth may also be treated as projecting conduits.

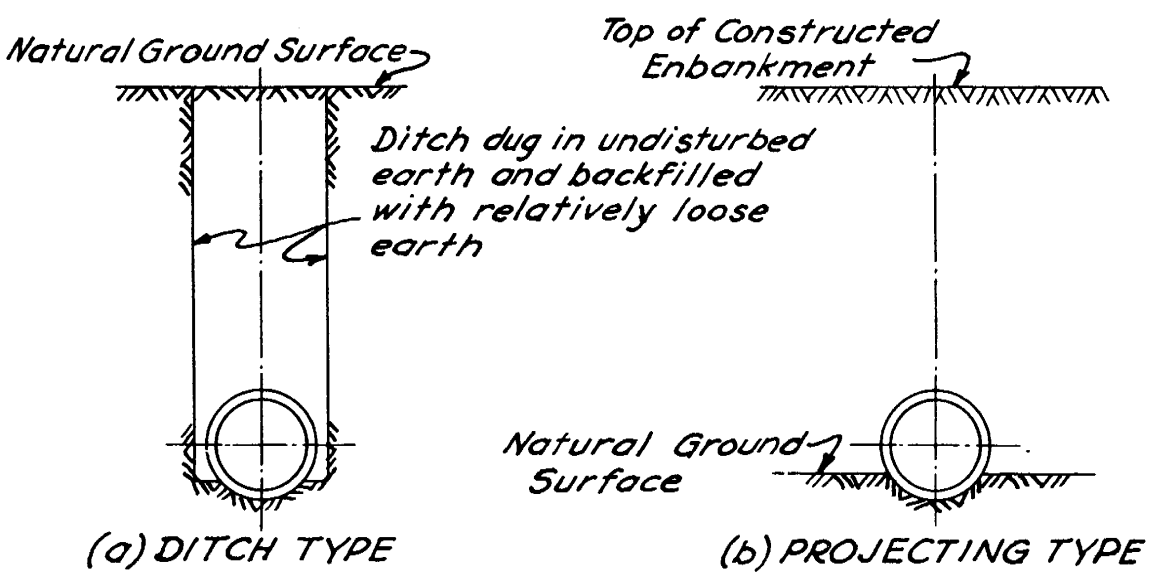

FIG. 6.2-7

Essential Elements of Typical Conduits

Ditch Conduits

"When a conduit is placed in a ditch not wider than about two or three times its outside breadth and covered with earth, the backfill will tend to settle downward. This downward movement or tendency for movement of the soil in the ditch above the pipe produces vertical frictional forces or shearing stresses along the sides of the ditch which act upward on the prism of soil within the ditch and help to support the backfill material. Assuming the cohesion between the backfill material and the sides of the ditch to be negligible, the magnitude of these vertical shearing stresses is equal to the active lateral pressure exerted by the earth backfill against the sides of the ditch multiplied by the tangent of the angle of friction between the two materials. This assumption of negligible cohesion is justified because: (a) Even when the ditch is dug in and backfilled with cohesive material, considerable time must elapse before effective cohesion between the backfill material and the sides of the ditch can develop after backfilling; and (b) the assumption of no cohesion yields the maximum probable load on the conduit. The maximum load may develop at any time during the life of the conduit due to heavy rainfall or other causes which may eliminate or greatly reduce cohesion between the backfill and the sides of the ditch."

The total vertical pressure within the ditch at the elevation of top of conduit is given by the following equation:

$$P = \gamma b_d^2 \frac{1 - e^{-\alpha H_c}}{2 K \mu'} \qquad (6.2\text{-}7)$$

where

P = total vertical pressure in the width b_d at the top of the conduit in pounds per linear foot of conduit.

γ = the unit weight of the backfill in pounds per cubic foot.

b_d = breadth or width of the ditch or trench at the top of the conduit.

e = 2.7183 = base of Naperian logarithms.

$$\alpha = \frac{2 K \mu'}{b_d} \qquad (6.2\text{-}8)$$

$$K = \frac{\sqrt{\mu^2+1} - \mu}{\sqrt{\mu^2+1} + \mu} \qquad (6.2\text{-}9)$$

= ratio of active lateral pressure to vertical pressure (from Rankine's theory).

μ' = tangent of the angle of sliding friction between backfill and adjacent earth.

μ = tangent of the angle of internal friction of the backfill material.

"The proportion of this total pressure that will be carried by the conduit will depend upon the relative rigidity of the conduit and of the fill material between the sides of the conduit and the sides of the ditch. In the case of very rigid pipes such as burned clay, concrete, or heavy cast-iron pipe, the side fills may be relatively compressible and the pipe itself will carry practically all the load, P. On the other hand, if the pipe is a relatively flexible, thin-walled pipe and the side fills are thoroughly tamped in at the sides of the pipe, the stiffness of the side fills may approach that of the conduit and the load on the structure will be reduced by the amount of load the side fills are capable of carrying.

"For the case of rigid ditch conduits with relatively compressible side fills, the load will be:

$$W_c = C_d \gamma b_d^2 \qquad (6.2\text{-}10)$$

"For the case of flexible pipes and thoroughly compacted side fills having the same degree of stiffness as the pipes, the load will be:

$$W_c = C_d \gamma b_d b_c \qquad (6.2\text{-}11)$$

in which W_c is the total load on the conduit, and

$$C_d = \frac{1 - e^{-\alpha H_c}}{2 K \mu'} \qquad (6.2\text{-}12)$$

The solution of equation (6.2-12) is facilitated by the use of the curves shown on drawing ES-15 which give values of C_d for various typical kinds of backfill material.

"The width of ditch, b_d , is the actual width of a normal, parallel-sided ditch. In case the ditch is constructed with sloping sides or the conduit is placed in a subditch at the bottom of a wider trench, experiments have shown that the width of ditch at or slightly below the top of the pipe is the proper width to use when determining the load.

"These ditch conduit formulas (equations 6.2-10 and 6.2-11) with proper selection of the physical factors involved give the maximum loads to which any particular conduit may be subjected in service. On the other hand, because of the development of cohesion, any particular conduit may escape the maximum load for a long time, sometimes until its removal for other causes than load failure. Experiments and field observations show that the load on a conduit at the time the fill is completed is usually less than it will be at some later time. This condition accounts for the fact that sewers and other conduits which have been observed to be structurally sound immediately upon completion are sometimes found to be cracked some months or years later."

A sample computation of C_d follows: Assume $K\mu' = 0.13$, and $H_c + b_d = 10$, then

$$C_d = \frac{1 - e^{-2K\mu' \frac{H_c}{b_d}}}{2K\mu'} = \frac{1 - e^{-2 \times 0.13 \times 10}}{2 \times 0.13}$$

$$= \frac{1 - \frac{1}{13.46}}{0.26} = 3.56$$

This value checks the value obtained from the curve on drawing ES-15.

Projecting Conduits

Drop inlet barrels and culverts, as usually built, are examples of projecting conduits. A thorough treatment of loads on projecting conduits requires no less than the amount of discussion devoted to it by Prof. Spangler in the reference given previously. A thorough study of this technical paper is recommended. Since space does not permit reproduction of this part of Prof. Spangler's discussion, only the actual working procedure necessary for the solution of our ordinary problems will be given below.

Almost all of the projecting conduits encountered in the work of the Soil Conservation Service will fall inside the range of variables indicated below.

The settlement deflection ratio, δ, will vary between zero (0) and one (1). Values recommended for use are given in drawing ES-22.

The projection ratio, ρ, is equal to the distance between the natural ground surface and the top of the conduit divided by the width of the conduit, b_c. For economically proportioned conduits this value will rarely exceed 1.6 and may vary from zero to 1.6.

Hence, the product $\delta\rho$ may vary between zero and 1.6, the limits indicated on the curve on drawing ES-22.

Values of $K\mu$ will, in almost all cases, lie between 0.11 and 0.192, the maximum possible value. Fig. 6.2-8 shows a plotting of $K\mu$ as the ordinate against μ as the abscissa with corresponding values of ϕ = arc tan μ.

It is possible for values of $K\mu$ to be below 0.11, but not probable. Only in case of a fully saturated soil with high clay content would such values be possible and these circumstances are unusual. Values of μ (and hence $K\mu$) can be determined from soil shear tests, and this should be done on important work. If there is doubt as to the proper value of $K\mu$ for use in any specific case, use the highest probable value. It is obvious from the curves in drawing ES-22 that the vertical load on a conduit

STRUCTURAL DESIGN: LOADS ON DITCH CONDUITS

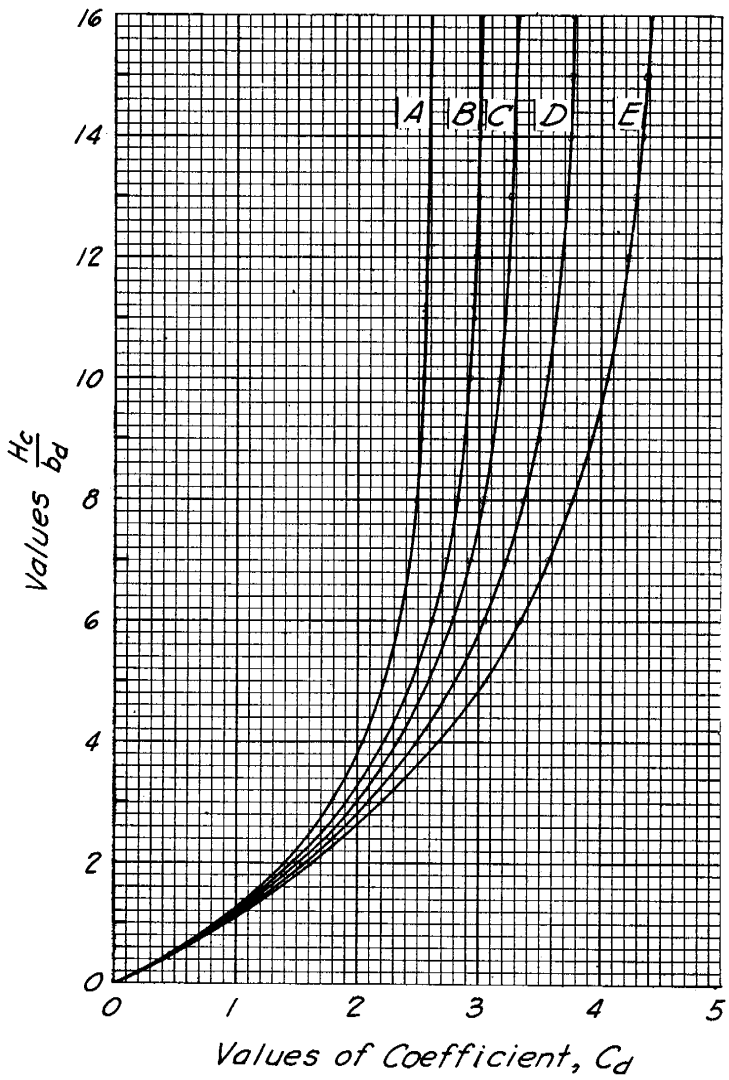

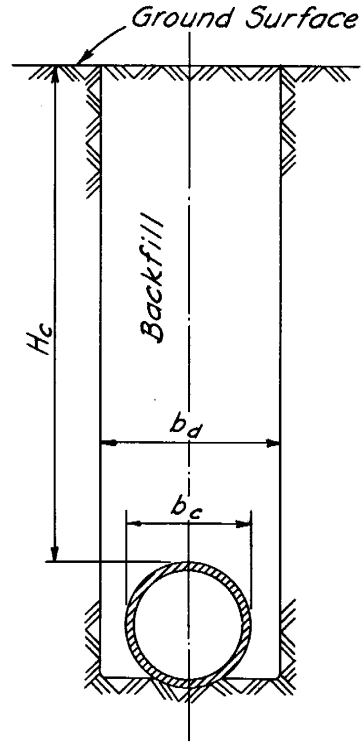

Ditch Conduit
Typical Installation

Curve	Conditions of Applicability	$K\mu = K\mu'$	γ
A	Minimum for granular materials	0.1924	100.
B	Maximum for sand and gravel	0.165	110.
C	Maximum for saturated top soil	0.150	110.
D	Ordinary maximum for clay	0.130	120.
E	Maximum for saturated clay	0.110	135.

W_c = load on conduit in lbs. per linear ft.
H_c = height of back fill above top of conduit in ft.
b_c = breadth of conduit in ft.
b_d = breadth of ditch at top of conduit in ft.
γ = unit weight of backfill in lbs. per cu. ft.

For Rigid Conduits

$$W_c = C_d \gamma b_d^2$$

For Flexible Pipes with Compacted Side Fills

$$W_c = C_d \gamma b_d b_c$$

Example: Find load per ft. on standard strength, 24 in. diam. R/c culv. pipe laid in 42 in. trench under 22 ft. of ordinary clay backfill.

$b_c = \frac{24+(2\times3)}{12} = 2.50$; $\gamma = 120.$

$b_d = 42 \div 12 = 3.50$; $H_c = 22.0$

$H_c/b_d = 22 \div 3.5 = 6.28$ then from curves $C_d = 3.1$

$W_c = C_d \times \gamma \times b_d^2$
$= 3.1 \times 120 \times 3.5^2 = 4560$ lbs.

REFERENCE Trans. Amer. Soc. of Civil Engrs., Vol. 113, pg. 316 - "Underground Conduits - An Appraisal of Modern Research" by Prof. M.G. Spangler.

U. S. DEPARTMENT OF AGRICULTURE
SOIL CONSERVATION SERVICE
ENGINEERING STANDARDS UNIT

STANDARD DWG. NO. ES-15
SHEET 1 OF 1
DATE 3-31-50

STRUCTURAL DESIGN:
LOADS ON RIGID PROJECTING CONDUITS

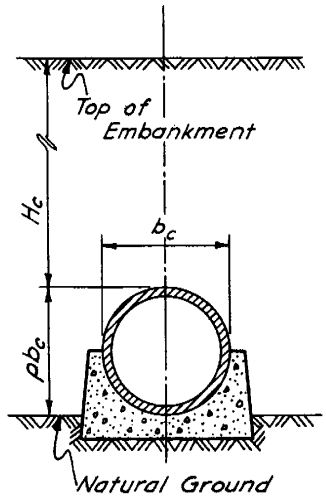

Foundation Material	δ
Rock or other unyielding material	1.00
Dense mixture of sand and gravel	0.80
Glacial till, dense, well graded	0.70
Clay, dense, consolidated, firm	0.70
Silt, loose sand or other yielding soils	0.50
Very soft, loose, wet, yielding material	0.30

Embankment Material	$K\mu$
Sand, gravel, or well graded sand, silt, clay mixture	0.19
Sandy, clayey silt or dry clay	0.17
Clay, permanently wet	0.15
Clay or silty clay, permanently saturated	0.13

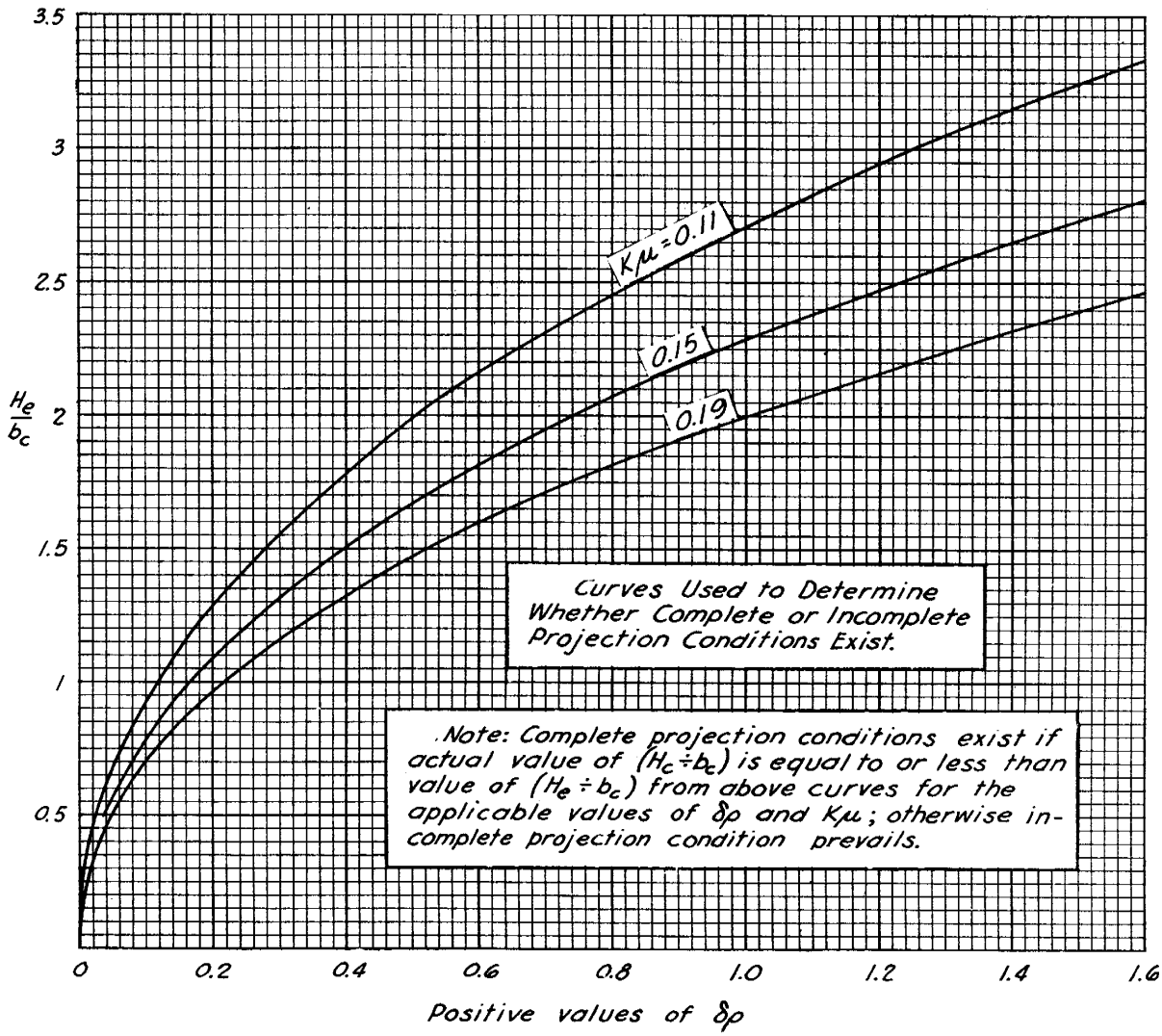

REFERENCE Trans. ASCE, vol. 113 "Underground Conduits - An Appraisal of Modern Research" by M. G. Spangler, M. ASCE.

U. S. DEPARTMENT OF AGRICULTURE
SOIL CONSERVATION SERVICE

ENGINEERING STANDARDS UNIT

STANDARD DWG. NO. ES-22

SHEET 1 OF 2

DATE 10-19-50

STRUCTURAL DESIGN:
LOADS ON RIGID PROJECTING CONDUITS

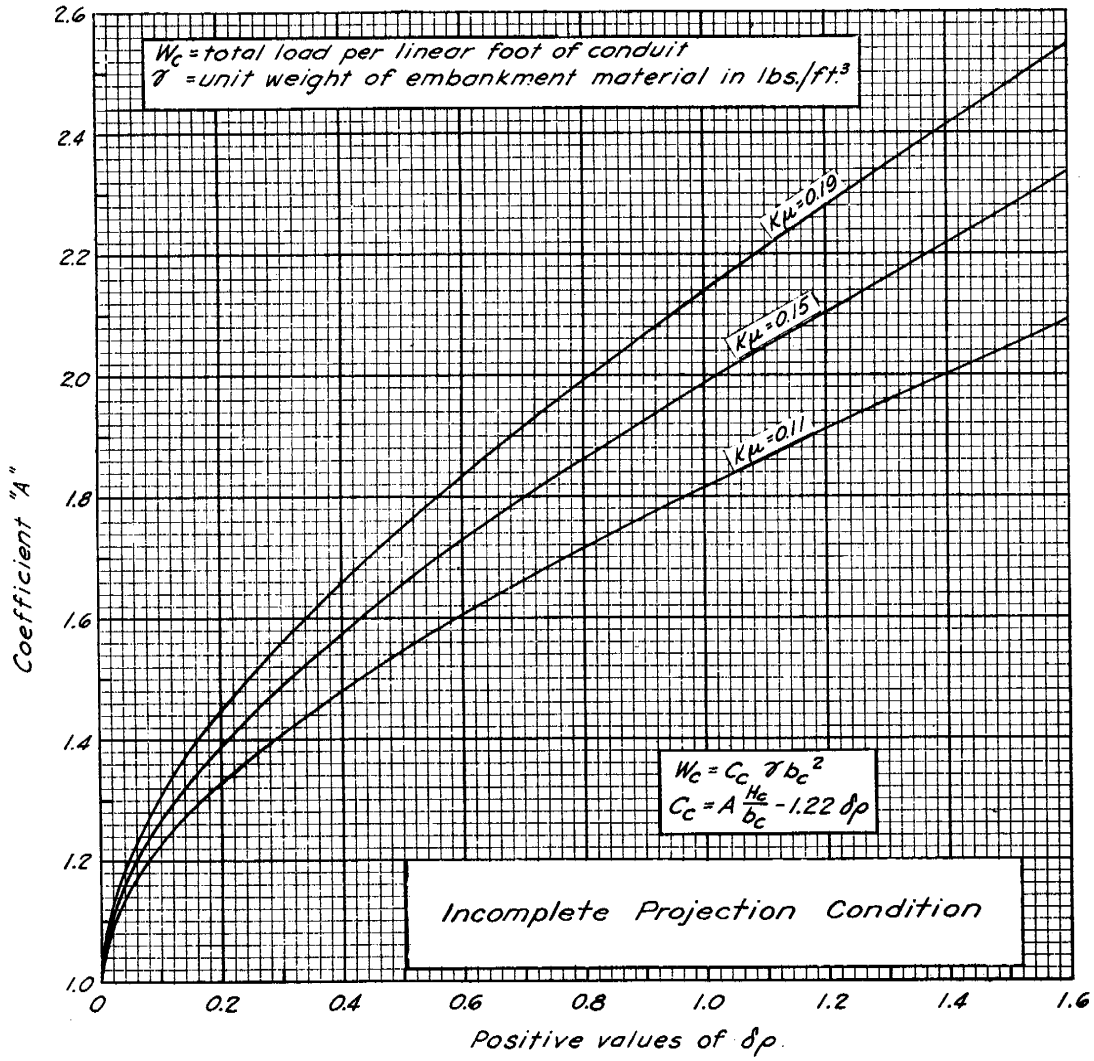

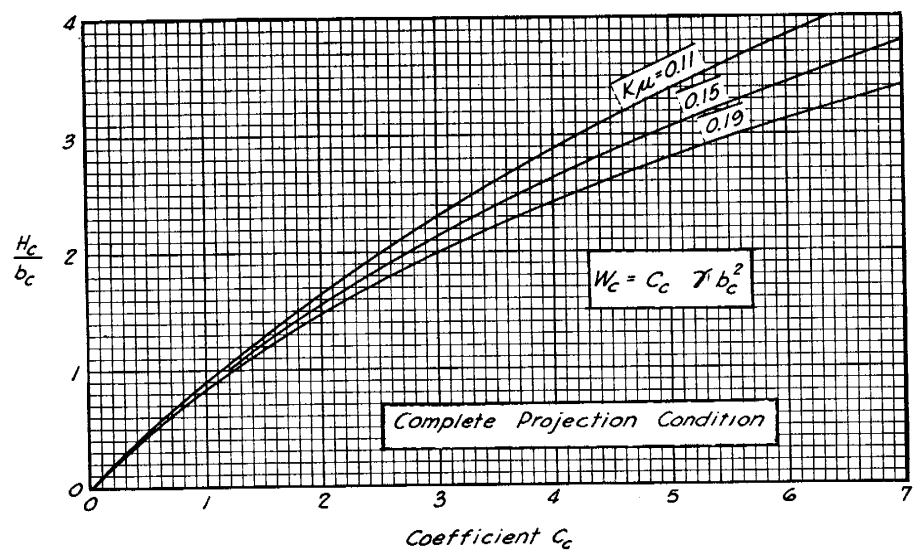

REFERENCE Trans. ASCE, vol. 113 "Underground Conduits - An Appraisal of Modern Research" by M. G. Spangler, M. ASCE.	U. S. DEPARTMENT OF AGRICULTURE SOIL CONSERVATION SERVICE ENGINEERING STANDARDS UNIT	STANDARD DWG. NO. ES-22 SHEET 2 OF 2 DATE 10-19-50

STRUCTURAL DESIGN: DISTRIBUTION OF SURFACE LOADS THROUGH EARTH FILL.

Single Concentrated Load

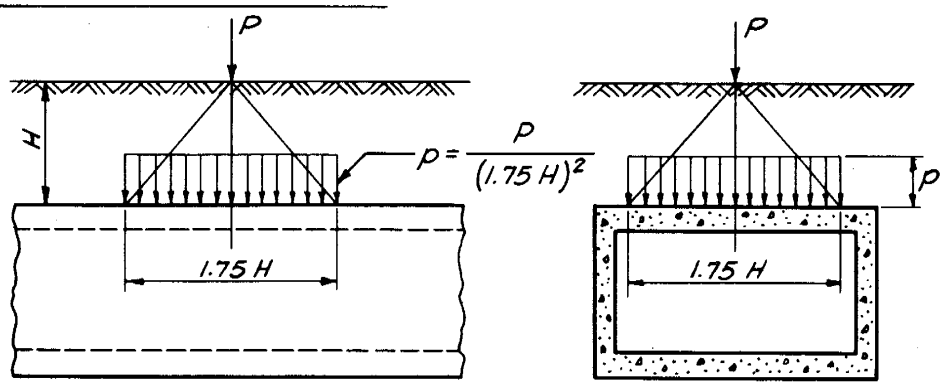

Elevation — Cross-section

Two Concentrated Loads - (overlapping areas of influence)

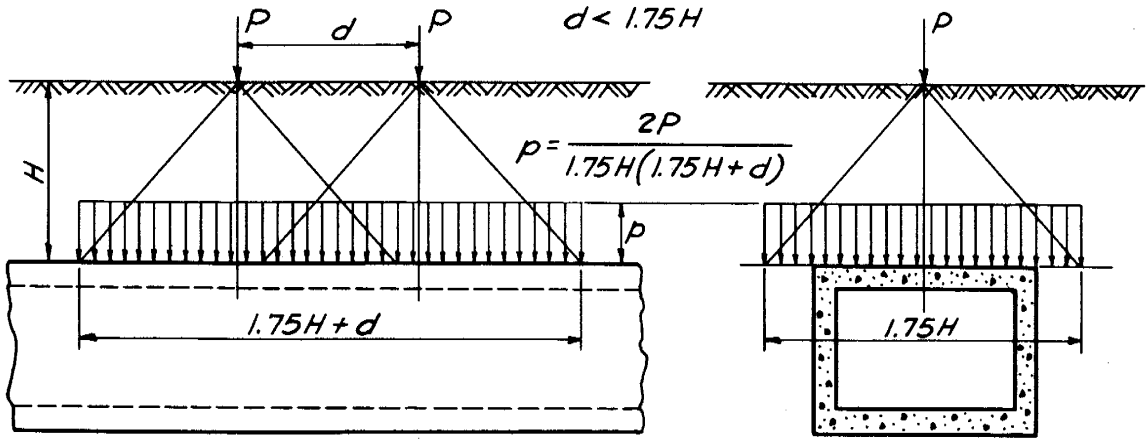

Elevation — Cross-section

Notes - General

1. When $H \leq 2$ ft. loads shall be treated as concentrated loads applied directly to the conduit.
2. Where $H > 10$ ft. wheel loads may be neglected.
3. When $H > 3$ ft. neglect effect of impact from moving wheel loads.
4. When $H \leq 3$ ft. add 20 percent to wheel loads for impact effect.
5. In unusual cases determine pressures from Boussinesq equations or other more precise methods. — See references listed below.

References:

1. "Fundamentals of Soil Mechanics" by D.W. Taylor - pages 250-266.
2. "The Theory and Practice of Reinforced Concrete" by C.W. Dunham, p.207.
3. "Underground Conduits - An Appraisal of Modern Research" by M.G. Spangler in Trans. A.S.C.E. Vol. 113 for 1948.
4. "Standard Specifications for Highway Bridges" of The American Association of State Highway Officials - fifth edition 1949 - page 143.

REFERENCE	U. S. DEPARTMENT OF AGRICULTURE SOIL CONSERVATION SERVICE ENGINEERING STANDARDS UNIT	STANDARD DWG. NO. ES - 25 SHEET 1 OF 1 DATE 4 - 26 - 50

increases with an increase in $K\mu$. Hence, to be on the conservative side, the highest probable value of $K\mu$ that might exist during the life of the structure should be used in computing design loads that will produce maximum moments and shears in the top and bottom slabs of rectangular conduits. (To determine maximum shears and moments in the side walls of rectangular conduits, the vertical and horizontal loads should be determined by use of the lowest probable value of $K\mu$.) For circular conduits, if in doubt as to the proper value, use $K\mu = 0.19$. A table of approximate values of $K\mu$ for different soils is shown on drawing ES-22.

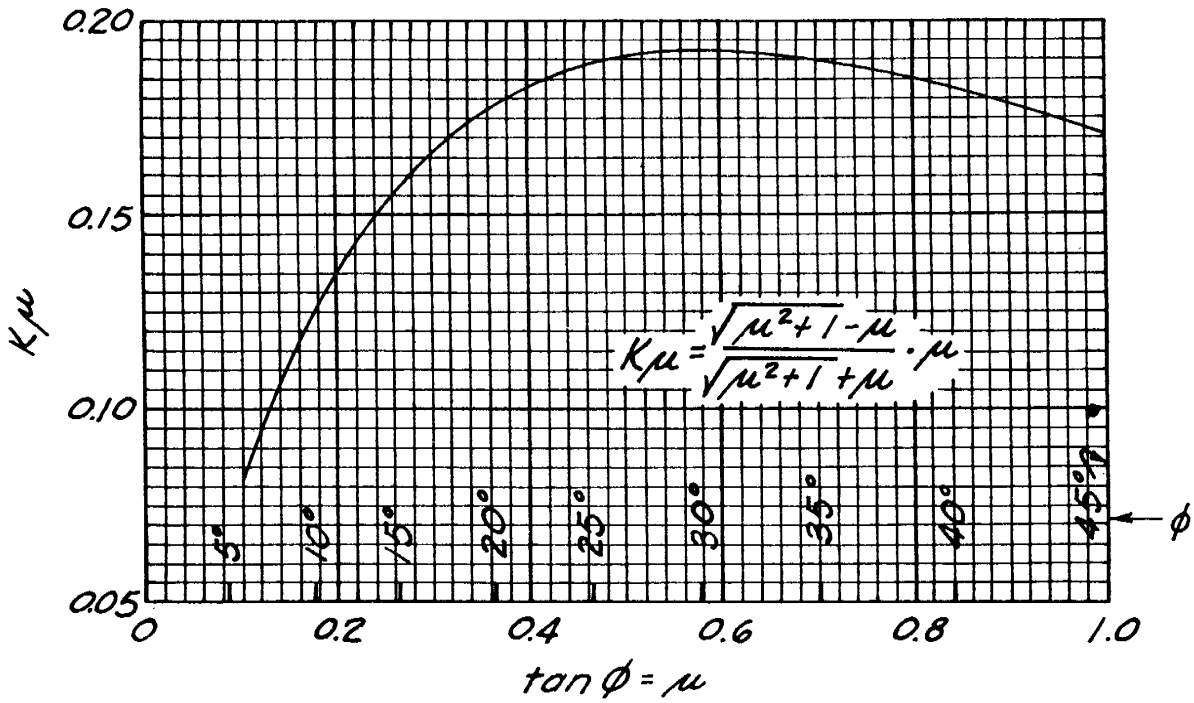

FIG. 6.2-8

The method of computing C_c (see drawing ES-22) used herein deviates slightly from the correct equations given by Prof. Spangler. A small error in results is due to an approximation which is compatible with the inherent lack of precision in estimating design values of δ and $K\mu$.

Computation procedure and the use of drawing ES-22 are illustrated by examples given below.

Example 1

Problem: It is proposed to build an earth dam with a culvert-type spillway as a retarding structure for upstream flood control. Preliminary design indicates that the height of fill above the top of the conduit, H_c, will be 38 feet and that a twin 5x5 ft monolithic reinforced concrete conduit is required to provide the necessary discharge capacity.

Preliminary structural design of the conduit indicates that the dividing wall between the two 5x5 conduits will need to be 8 in. wide, that the sidewalls will each have a width of 9 in. at the top of the conduit, and that the top and bottom slabs of the conduit will have thicknesses of about 15 and 16 in. respectively. The foundation for the conduit is a glacial till, dense and well graded and the embankment material will be a dense (compacted) well-graded mixture of sand, silt, and clay with a unit weight, γ, of 132 lbs per cu ft. Since it is necessary to excavate overburden to sound foundation for both the earth embankment and the conduit, the conduit will project above the excavated grade for its full height. Find the maximum load on top of the conduit per foot of conduit length and the average load intensity in lbs per sq ft.

Step 1. Select the proper value of δ from the table on drawing ES-22, compute the projection ratio, ρ, and then compute the product $\delta\rho$.

From ES-22, for a foundation material of dense, well-graded glacial till, $\delta = 0.70$.

The projection ratio, ρ, equals the difference in elevation between the top of the conduit and the ground line divided by the top width of the conduit, b_c. In this case the above difference in elevation is equal to the height of the conduit = $[(15 + 16) \div 12] + 5 = 7.58$ ft, and the top width of the conduit, b_c, = $[(9 + 9 + 8) \div 12] + (2 \times 5) = 12.17$ ft. Then $\rho = 7.58 \div 12.17 = 0.623$, and $\delta\rho = 0.70 \times 0.623 = 0.436$.

Step 2. Select a proper value of $K\mu$ from drawing ES-22 for the type of embankment material to be used. The highest probable value of $K\mu$ for a compacted, well-graded mixture of sand, silt, and clay is 0.19.

Step 3. Compute the value of $(H_c \div b_c)$ from data on H_c given in the problem and the value of b_c computed in step 1. $(H_c \div b_c) = (38 \div 12.17) = 3.12$.

Step 4. From the "Curves Used to Determine Whether Complete or Incomplete Projection Conditions Exist" on sheet 1 of 2 of ES-22, find the proper value of $(H_e \div b_c)$ for the values of $\delta\rho$ and $K\mu$ determined above and compare this value with the value of $(H_c \div b_c)$ found in step 3. If $(H_c \div b_c)$ is greater than $(H_e \div b_c)$, the incomplete projection condition exists; and if $(H_c \div b_c)$ is equal to or less than $(H_e \div b_c)$, the complete projection condition exists.

In our present example for $\delta\rho = 0.436$ and $K\mu = 0.19$, $(H_e \div b_c) = 1.38$. From step 3 $(H_c \div b_c) = 3.12$, which is greater than 1.38, hence an incomplete projection condition exists.

Step 5. From the proper curve on sheet 2 of ES-22, compute the efficient C_c.

In this example, since the incomplete projection condition exists, the value of A from the curves at the top of sheet 2 of ES-22 and

compute C_c from the following equation:

$$C_c = A\ (H_c \div b_c) - 1.22\,\delta\rho \qquad (6.2\text{-}13)$$

If the complete projection condition exists, find the value of C_c directly from the curves at the bottom of sheet 2 of ES-22.

For the example at hand, find A = 1.69; then $C_c = (1.69 \times 3.12) - (1.22 \times 0.436) = 4.74$.

Step 6. Compute W_c = load per linear foot of conduit from the following equation:

$$W_c = C_c\ \gamma\ b_c^2 \qquad (6.2\text{-}14)$$

In this case $W_c = 4.74 \times 132 \times 12.17^2 = 4.74 \times 1.32 \times 10^2 \times 1.48 \times 10^2 = 9.27 \times 10^4 = 92{,}700$ lbs.

Next compute the load in lbs per sq ft on the conduit = $W_c \div b_c = (9.27 \times 10^4) \div 12.17 = 0.762 \times 10^4 = 7620$ lbs per sq ft.

It is significant that the ratio of the actual load to the weight of earth above the top of the conduit = $7620 \div (132 \times 38) = 1.52$.

Note: If the final structural design deviates appreciably from the dimensions used in the load determination, revision is necessary.

Example 2

Problem: Find the load intensity in lbs per sq ft on top of the conduit of example 1 when H_c = 10 ft. Assume that conduit dimensions, foundation conditions, and embankment are the same as in example 1.

Step 1. From example 1, b_c = 12.17 ft and $\delta\rho = 0.436$.

Step 2. From example 1, $K\mu = 0.19$.

Step 3. $H_c \div b_c = 10 \div 12.17 = 0.823$.

Step 4. From example 1, $H_e \div b_c = 1.38$ for $K\mu = 0.19$ and $\delta\rho = 0.436$. Since $(H_c \div b_c) = 0.823$ (from step 3) is less than $(H_e \div b_c) = 1.38$, the complete projection condition exists.

Step 5. Since a complete projection condition exists, find C_c directly from the curves at the bottom of sheet 2 of ES-22. For $H_c \div b_c = 0.823$ and $K\mu = 0.19$, $C_c = 0.97$.

Step 6. $W_c = C_c\ \gamma\ b_c^2 = 0.97 \times 132 \times 12.17^2 = 0.97 \times 1.32 \times 10^2 \times 1.48 \times 10^2 = 1.895 \times 10^4 = 18{,}950$ lbs. $W_c \div b_c = 18{,}950 \div 12.17 = 1560$ psf.

The ratio of load to weight of earth above the conduit = $1560 \div (132 \times 10) = 1.18$.

Negative Projecting Conduits

Negative projecting conduits are constructed in a narrow trench as shown in fig. 6.2-9. They differ from ditch conduits in that the embankment extends above the top of the ditch (natural ground line) for a distance which is considerably greater than the distance from the top of the conduit to the top of the ditch.

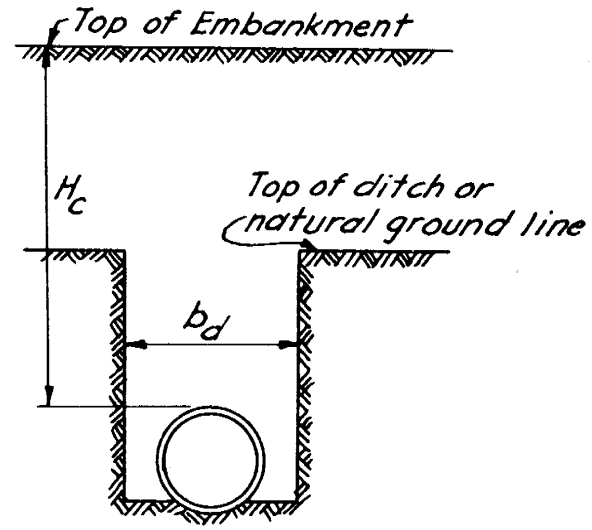

Typical Negative Projecting Conduit

FIG. 6.2-9

The mathematical theory for this condition has not been published. If the backfill between the top of the conduit and the natural ground line were filled with loosely placed material, the loads on the conduit would probably be less than on a normal projecting conduit with equal fill height. If the backfill in the ditch (as indicated above) were compacted to equal or greater density than the adjacent natural ground, the loads on the conduit would probably approach the loads on a fully projecting conduit.

Since the theory is not available for this load condition, and since dam construction methods do not permit the placement of loose fill around or above the conduit (because of seepage and possible piping failure), it is recommended that conduits installed in the negative projection condition be designed as projection conduits with a positive projection ratio of 0.8.

It is difficult to see how a conduit could be safely installed in an earth dam embankment as a negative projecting conduit, since all of the backfill would have to be thoroughly compacted.

Distribution of Loads. The total earth fill load per longitudinal foot of conduit, W_c, may be assumed to be uniformly distributed in the transverse direction over the width of the conduit, b_c. Hence, the load in lbs per sq ft on the conduit is equal to $W_c \div b_c$. For circular or elliptical conduits a slightly more accurate and conservative assumption is that the load will be uniformly distributed over the width of the conduit subtended by an angle of 120 degrees symmetrical about the vertical axis of the conduit.

Surface Loads. The following method of computing the effect of surface loads on underground conduits is an approximation. More accurate methods based on the Boussinesq equations are available, but their application is somewhat tedious and the added refinement will not compensate for the cost of applying the method on most of our work.

A single concentrated load applied directly to the earth fill surface is assumed to produce a uniform intensity of pressure at a distance H below the fill surface on a square area of influence whose side dimension is 1.75H. When two or more equal concentrated loads are so located on a horizontal fill surface that their areas of influence overlap for a given value of H, the intensity of pressure shall be determined by dividing the total of such loads by the area contained within the outside boundary of their combined areas of influence. These conditions are illustrated in drawing ES-25.

The specifications of the American Association of State Highway Officials, fifth edition, may be used where applicable instead of the above.

2.2.5 Highway Loads. The latest edition (1949) of the "Standard Specifications for Highway Bridges" of the American Association of State Highway Officials provides thoroughly tried and tested load assumptions for highways. These specifications should be accepted as standard and used unless the specifications of the highway agency having jurisdiction over the project being designed require more conservative design assumptions.

2.2.6 Wind Loads. The usual structures designed and built by the Soil Conservation Service are not materially affected by wind; and where wind loads are significant, ordinary methods of load determination are adequate.

Such methods are based on the assumption that the wind direction is parallel to the earth's surface. The intensity of pressure on a vertical surface normal to the wind is given by the following equation:

$$p = KV^2 \qquad (6.2\text{-}15)$$

where

p = pressure on a vertical flat surface normal to wind direction in pounds per square foot (psf).
K = a shape factor coefficient.
V = wind velocity in miles per hour.

Values of K vary over a range from 0.002 to 0.006 depending upon the shape of the body. A design value commonly used is K = 0.003. Assuming a wind velocity of 100 miles per hour and K = 0.003, p equals 30 psf, which is another commonly used design value.

For surfaces that are inclined to the wind direction, the intensity of normal pressure is given with satisfactory accuracy by Duchemin's equation which follows:

$$p_n = p \frac{2 \sin \theta}{1 + \sin^2 \theta} \qquad (6.2\text{-}16)$$

where

p_n = normal unit pressure on inclined surface in psf.
p = pressure on flat vertical surface normal to wind direction in psf from equation (6.2-15).
θ = angle between the horizontal and the inclined surface.

For example: Assume a design value for p = 30 psf. Then the normal pressure on a roof having a rise of 10 feet in a 40-foot span is computed as follows: θ = arc tan 0.5; sin θ = 0.447

$$p_n = 30 \frac{2 \times 0.447}{1 + (0.447)^2} = 22.4 \text{ psf.}$$

An excellent discussion of this general subject is contained in an article entitled "Wind Pressure on Structures" by Mr. George E. Howe, which was published in the March 1940 issue of Civil Engineering, Vol. 10, No. 3. This reference contains an extensive bibliography on this subject.

2.2.7 Snow Loads. Snow loads, including sleet (ice), act vertically and their magnitude is a function of the wind velocity, geographic location of the structure, slope of the loaded surface, and other factors. Snow loads vary from zero to 30 psf or more depending upon the above factors. Where sleet is probable, a design load of 10 psf is often assumed to provide for its effect on the structure.

Since there are relatively few design situations in our work that require consideration of snow and ice loads, you are referred to standard handbooks and other available references for additional data.

2.2.8 Ice Pressures. Ice pressures used in the design of dams have ranged from zero to about 50,000 lbs per lin ft. The problem is highly indeterminate and recommendations vary over a wide range.

Ice pressure depends upon (1) thickness of the ice sheet, (2) rate and range of change in ice temperature which is not directly correlated or equal to air temperature, (3) the temperature gradient through the ice sheet, (4) the degree of confinement of the ice sheet at its boundaries, and (5) other factors. One of the most recent discussions of this subject is found in a paper entitled "Thrust Exerted by Expanding Ice Sheet" by Edwin Rose, Esq. in the Transactions of the American Society of Civil Engineers, Vol. 112, page 871, which contains a bibliography on this subject.

Most structures designed or built by the Soil Conservation Service are not subject to damaging ice pressures for several reasons. If damage or excessive load from freezing ice is anticipated, careful consideration should be given to possible changes in layout and design to avoid such damaging loads. Such changes can often be made with less increase in cost than would be involved in designing to withstand the possible ice pressure. Earth fill berms at normal pool elevation may be designed to hold the water surface away from reinforced concrete drop spillways, drop inlets, chutes, trash racks, and other structural elements that might otherwise be subjected to ice pressure; ice pressures have no significant effect on earth embankments principally because of the ability of the earth to yield without damage and because of the sloping surface of contact between the earth and the ice which limits the normal pressure to that required to overcome frictional resistance.

Mr. Clarence W. Dunham, in his book "The Theory and Practice of Reinforced Concrete", recommends a load of 700 lbs per lin ft of retaining wall applied at the earth surface to provide for frost (ice) pressure where poor surface drainage exists and there is a probability of ice formation in the upper layers of the soil profile. This recommendation emphasizes the necessity for, and advantages of good surface drainage and good internal drainage of the soil profile, conditions under which the above load need not be considered. Please refer to the discussion on the effect of drainage on active lateral earth pressures in part 2.2.2 of this section of the handbook.